Town of Nantucket, Massachusetts

*Capital Improvement Plan*

2018 thru 2027

# PROJECTS BY DEPARTMENT

| Department | # | Priorit | 2018 | 2019 | 2020 | 2021 | 2022 | 2023 | 2024 | 2025 | 2026 | 2027 | Total |
|---|---|---|---|---|---|---|---|---|---|---|---|---|---|
| **Airport** | | | | | | | | | | | | | |
| Airport Equipment and Vehicles | NMA-18-001 | 1 | 198,000 | | | | | | | | | | 198,000 |
| Extension of Bag Belt | NMA-18-002 | 1 | 200,000 | | | | | | | | | | 200,000 |
| Fire Supression System for Fuel Farm | NMA-18-003 | 1 | 70,000 | | | | | | | | | | 70,000 |
| Fuel Farm Piping Replacement | NMA-18-004 | 1 | 436,100 | | | | | | | | | | 436,100 |
| Paint and Beads &Rubber & Markings Removal | NMA-18-005 | 1 | 176,000 | 481,750 | 264,040 | 41,000 | 176,000 | 481,750 | 264,040 | 41,000 | | | 1,925,580 |
| Airport Facilty Upgrades and Improvements | NMA-18-006 | 1 | 52,000 | | | | | | | | | | 52,000 |
| 5 Year CIP EA/EIR Permitting | NMA-18-007 | 1 | 450,000 | | | | | | | | | | 450,000 |
| ALP Update and SMS and Narrative | NMA-18-008 | n/a | 250,000 | | | | | | | | | | 250,000 |
| Reconstruct Apron Area 3/Replace Fence | NMA-18-009 | 1 | 2,200,000 | | | | | | | | | | 2,200,000 |
| Airport Operations/ARFF | NMA-19-001 | 1 | | 219,000 | | | | | | | | | 219,000 |
| Airport Maintenance & Equipment | NMA-19-002 | n/a | | 140,000 | | | | | | | | | 140,000 |
| Airport Information Technology | NMA-19-003 | 1 | | 7,500 | | | | | | | | | 7,500 |
| Airport Security | NMA-19-004 | 1 | | 32,000 | | | | | | | | | 32,000 |
| Fuel Farm Expansion & Rehab | NMA-19-005 | 1 | | 650,000 | | | | | | | | | 650,000 |
| Runway 24 High Speed taxiway | NMA-19-006 | 1 | | 775,000 | | | | | | | | | 775,000 |
| Centerline TDZ Replacement | NMA-19-007 | 1 | | 1,200,000 | | | | | | | | | 1,200,000 |
| Air Curtains in Bag Claim and Enterance | NMA-19-008 | n/a | | 80,000 | | | | | | | | | 80,000 |
| Nantucket Operations & ARFF | NMA-20-001 | 1 | | | 194,000 | | | | | | | | 194,000 |
| Nantucket Airport Maintenance & Equipment | NMA-20-002 | n/a | | | 27,000 | | | | | | | | 27,000 |
| Nantucket Airport Security | NMA-20-003 | n/a | | | 42,250 | | | | | | | | 42,250 |
| Parallel taxiway to 15/33 | NMA-20-004 | 1 | | | 1,500,000 | | | | | | | | 1,500,000 |
| South Apron Extension | NMA-20-005 | 1 | | | 2,100,000 | | 2,500,000 | | | | | | 4,600,000 |
| Wastewater treatment/upgrade | NMA-20-006 | 1 | | | 125,000 | | | | | | | | 125,000 |
| Generator Rehabs | NMA-20-007 | 1 | | | 75,000 | | | | | | | | 75,000 |
| Taxiway E run up pads mill overlay | NMA-20-008 | 1 | | | 4,500,000 | | | | | | | | 4,500,000 |
| Environmental - Buy out Bunker Mitigation | NMA-21-0004 | 1 | | | | 900,000 | | | | | | | 900,000 |
| Nantucket Operations & ARFF | NMA-21-001 | 1 | | | | 25,000 | | | | | | | 25,000 |

| Department | # | Priorit | 2018 | 2019 | 2020 | 2021 | 2022 | 2023 | 2024 | 2025 | 2026 | 2027 | Total |
|---|---|---|---|---|---|---|---|---|---|---|---|---|---|
| SRE Expansion | *NMA-21-002* | 1 | | | | 2,500,000 | | | | | | | *2,500,000* |
| Restaurant Hood make up air replacement | *NMA-21-003* | 1 | | | | 250,000 | | | | | | | *250,000* |
| Nantucket Operations & ARFF | *NMA-22-001* | 1 | | | | | 154,000 | | | | | | *154,000* |
| Nantucket Airport Information Technology | *NMA-23-001* | 1 | | | | | | 46,500 | | | | | *46,500* |
| Nantucket Airport Security | *NMA-23-002* | n/a | | | | | | 500,000 | | | | | *500,000* |
| Taxiway E Rehab | *NMA-23-003* | n/a | | | | | | 2,500,000 | | | | | *2,500,000* |
| Nantucket Operations & ARFF | *NMA-24-001* | n/a | | | | | | | 400,000 | | | | *400,000* |
| Instrument Approach Upgrades | *NMA-24-002* | 1 | | | | | | | 2,000,000 | | | | *2,000,000* |
| Nantucket Airport Security | *NMA-25-001* | 1 | | | | | | | | 360,000 | | | *360,000* |
| Nanatucket Airport Erosion Control | *NMA-25-002* | 1 | | | | | | | | 7,500,000 | 7,500,000 | | *15,000,000* |
| **Airport Total** | | | **4,032,100** | **3,585,250** | **8,827,290** | **3,716,000** | **2,830,000** | **3,528,250** | **2,664,040** | **7,901,000** | **7,500,000** | | ***44,583,930*** |
| **GRAND TOTAL** | | | **4,032,100** | **3,585,250** | **8,827,290** | **3,716,000** | **2,830,000** | **3,528,250** | **2,664,040** | **7,901,000** | **7,500,000** | | ***44,583,930*** |

**Project #** NMA-18-001

**Project Name** Airport Equipment and Vehicles

**Department** Airport
**Contact** Tom Rafter
**Type** Equipment
**Useful Life**
**Category** Unassigned
**Priority** 1 Critical

**Fund Type** Enterprise Fund
**Enterprise Fund** Airport
**Location** None

**Total Cost** $198,000

## Description

This project will replace the following pieces of equipment at the airport.

| | |
|---|---|
| 1) A-1 Tire Replacement | $ 16,000.00 |
| 2) Loader 1 Tire Replacement | $ 16,000.00 |
| 3) Deicer Truck | $ 72,000.00 |
| 4) Heavy Duty Brush Deck | $ 30,000.00 |
| 5) Replace Compressor | $ 22,000.00 |
| 6) Security and Custodian Vehicle | |

## Justification

1) A-1 Tire Replacement:Replace 4 tires on 2002 Oshkosh TI-1500 Aircraft Rescue Fire Truck (A-1). Current tires are original from 2001 and are very worn and cracked.

2) Loader 1 Tire Replacement:Replace 4 tires on 1988 John Deer 644E Front End Loader, which is primarily used for snow removal. Tires are 10 plus years old and have several large cuts in them. Current tires are also not ideal for snow & ice traction.

3) Deicer Truck:Replace current deicer with a new GS700, 800 gallon aircraft deicer with perkins diesel engine, passenger overhead window with wiper system.

4) Heavy Duty Brush Deck:This equipment is to provide for heavy brush mowing as required by the FAA for wildlife hazard management and MESA for rare species management.

5) Replace Compressor:Replace the compressor that is currently used for the sprinklers & jack hammer. Current compressor is 20 plus years old and replacement parts are no longer being made (built in 1974).

6) Security and Custodian Vehicle (2 of 2):Purchase of a 2016/2017 Ford Explorer 4x4 - The Security Dept currently doesn't have a vehicle and has to share the vehicle that the custodians use. The Security Department needs their own vehicle to be able to do regular security checks, fencing rounds, respond to emergency incidents etc.

| Expenditures | 2018 | 2019 | 2020 | 2021 | 2022 | 2023 | 2024 | 2025 | 2026 | 2027 | Total |
|---|---|---|---|---|---|---|---|---|---|---|---|
| Equip/Vehicles/Furnishings | 198,000 | | | | | | | | | | 198,000 |
| **Total** | **198,000** | | | | | | | | | | **198,000** |

| Funding Sources | 2018 | 2019 | 2020 | 2021 | 2022 | 2023 | 2024 | 2025 | 2026 | 2027 | Total |
|---|---|---|---|---|---|---|---|---|---|---|---|
| Airport Enterprise Operations | 198,000 | | | | | | | | | | 198,000 |
| **Total** | **198,000** | | | | | | | | | | **198,000** |

## Budget Impact/Other

1) A-1 Tire Replaccement: Will save on maintenance and improve overall safety

2) Loader 1 Tire Replacement:Improved tire traction will improve plowing efficiency

3) Deicer Truck:More effective for de-icing aircraft and safer for the operators; decreasing liability

4) Heavy Duty Brush Deck: N/A

5) Replace Compressor: Won't have to rent a compressor or hire a third party when it's needed

67) Security and Custodian Vehicle: N/A

ounded to $16k

# Tire Replacement for Airport 1- 2002 OSHKOSH TI-1500 Aircraft Rescue Fire Truck

Quote given by Sullivan Tire Company

| | |
|---|---|
| 4- 24R21 Michelin XZL tires @ $3235 each | $12,940 |
| 10- hrs labor @ $125 per hr | $1,250 |
| 4- O-rings @ $18 each | $72 |
| 4- Tire disposal fee @ $175 | $700 |
| 1- Boat fare | $626 |
| **Total** | **$15,588** |

Note:

Tires currently on vehicle are original tires from 2002. They have dry cracking and wear.

**Nathaniel Ray**

**From:** Paul Harrington <paul.harrington@sullivantire.com>
**Sent:** Monday, July 18, 2016 11:36 AM
**To:** Nathaniel Ray
**Subject:** FW: 24R21 tire quote for airport crash vehicle.

---

**From:** Paul Harrington
**Sent:** Monday, July 18, 2016 11:25 AM
**To:** Nathan Widell <nathanwidell@comcast.net>
**Cc:** David Bradley <david.bradley@sullivantire.com>; Robert Cole <bob.cole@sullivantire.com>; Bob Freeman <bob.freeman@sullivantire.com>; Paul Harrington <paul.harrington@sullivantire.com>
**Subject:** 24R21 tire quote for airport crash vehicle.

Nathan,

Listed below are the prices on the tires we spoke about last week. Along with the tires listed I have listed the labor and the boat trip over and back. We should be able to complete in one day so that is how we have quoted it. Thanks for the opportunity and please let me know if you have any questions?

1- 24R21 Bridgestone VGT . Price per tire is $2612.00 each.
2- 24R21 Michelin XZL. Price per tire is $3235.00 each.
3- Labor is $125.00 per hour and would be 8 to 10 hours.
4- Boat trip over and back before September 17th is $626. 00.
5- O-Rings 21" . Price per o-rings is $18.00 each.

Both the Bridgestone and the Michelin tires are available at this time and we could have in 10 days or less.

6- Tire disposal for the 24R21 tires would $175.00 each if you wanted us to get rid of them.

Thanks,
Paul

---

**Paul Harrington**
**Comm OTR Acct Mgr**

SULLIVAN TIRE

151 Charles F Colton Rd. | Taunton, MA 02780
tel 508-408-0608 | fax 508-408-0689

**Confidentiality Note:** This e-mail and any attachments are confidential and may be protected by legal privilege. If you are not the intended recipient, be aware that any disclosure, copying, distribution or use of this e-mail or any attachment is prohibited. If you have received this e-mail in error, please notify us immediately by returning it to the sender and delete this copy from your system. Thank you for your cooperation.

**Nathaniel Ray**

| | |
|---|---|
| **From:** | Paul Harrington <paul.harrington@sullivantire.com> |
| **Sent:** | Monday, September 19, 2016 7:24 AM |
| **To:** | Nathaniel Ray |
| **Cc:** | David Bradley; Robert Cole |
| **Subject:** | Tire , labor and boat trip quote for 23.5R25 tires. |

Nathanial,

Listed below is your quote for 23.5R25 Snow Wedge design tires. These are all approximate prices as you told me you needed the quote for next year. Thank you and let me know if you have any further questions?

1- 23.5R25 Bridgestone VSW, snow wedge tires. Price per tire is $270.92.
2- 23.5R25 Michelin Snow Wedge tires. Price per tire is $3440.05. This might be high as I could not get the Mass state bid price?
3- 25" O-Rings Price per ring is $18.00.
4- Labor per hour. Price per hour is $125.00. Approximate hours is 8 to 10.
5- Boat trip cost. Price is $626.00.

Thank You,

Paul G. Harrington.

**Paul Harrington**
Comm OTR Acct Mgr

SULLIVAN TIRE

-d to $16k

Loader 1 Tire Replacement- 1988 John Deere 644E Front End Loader

| | | |
|---|---|---|
| 4 | Michelin Snow Wedge Tires @ 3440.05 | $13,760.20 |
| 4 | 25" O-Rings @ $18 | $72.00 |
| 10 | Hours Labor @ $125 | $500.00 |
| 1 | Boat Fare | $626.00 |
| 4 | Tire disposal fee @ $175.00 | $700.00 |
| **Total** | | **$15,658.20** |

Note:

Tires on vehicle are older than 10 years and have several large cuts in them. Loader is primarily used for snow removal. Current tires are also not ideal for snow and ice traction. Replacement tires offer better traction in snow and ice conditions.

*Source: Email from P. H. on Friday 9/16/16*

| | | |
|---|---|---|
| *New List Price* | $ | 155,258.00 |
| Reappropriate balance from 55432-95138 | $ | (52,469.74) |
| Reappropriate balance from 55484-94102 | $ | (30,842.20) |
| | **$** | **71,946.06** |
| *FY18 Capital Estimate* | **$** | **72,000.00** |

# Model GS Series De-Icer's

*A Simple, Economical Approach to De-Icer's*

| VECHILE SPECIFICATIONS | GS 700 | GS 1400 |
|---|---|---|
| Fluid Tank (De-Ice) | 600 US gal. | 1200 US gal. |
| Fluid Tank (Anti-Ice) | 200 US gal. | 200 US gal. |
| De-Icing Fluid Pump | Keen 2-Stage Centrifugal | Keen 2-Stage Centrifugal |
| Anti-Icing Fluid Pump | Hardi Rotary Pump 363 | Hardi Rotary Pump 363 |
| Fluid Delivery (De-Ice) | 20-30GPM(76-114L) / 150 psi | 20-30(76-114L)GPM / 150 psi |
| Fluid Delivery (Anti-Ice) | 20 GPM (76L) / 50 psi | 20 GPM (76L) / 50 psi |
| Heater: GSS ***"Mini-Max"*** | 12 VDC. 980,000 BTU | 12 VDC. 980,000 BTU |
| ***Quick Heat System*** Pre-Heat to Deice Time | Approx **12** min. | Approx **20** min. |
| Chassis: | Custom to Spec. | Custom to Spec. |
| Drive System | Hydrostatic / Dynamic Braking | Hydrostatic / Dynamic Braking |
| Engine | Perkins 404D Diesel | Perkins 1104D Diesel |
| Fuel | Diesel / 50 gal. (189 L) | Diesel / 50 gal.(189 L) |
| Maximum Speed | 20 mph (32km/hr) | 20 mph (32km/hr) |
| Max Deicing Speed | 3 mph (5km/hr) | 3 mph (5km/hr) |
| Aerial Device: | Articulating Boom | Articulating Boom |
| Max Working Height | 32ft.(9.8 m) | 34 ft.6 in.(10.5 m) |
| Dimensions: | | |
| Length | 23 Ft. 4 In. (7.1 m) | 27 Ft. 8 In. (8.4m) |
| Width | 7 Ft. 8 In. (2.3 m) | 8 Ft. 4 In. (2.5 m) |
| Wheelbase | 9 Ft. 3 In.(2.8 m) | 11 Ft. 3 In. (3.4 m) |
| Height (Boom Retracted) | 9 Ft. 7 In. (2.9 m) | 10 Ft. 5 In. (3.2 m) |
| GVW Empty Tanks | 11,700 lbs. (5307 kg) | 13,500 lbs. (6124 kg) |
| GVW Full Tanks | 15,800 lbs. (7167 kg)Cal | 24,800 lbs. (11249 kg)Cal |

## Optional Equipment

- Caterpillar 3.4 Diesel
- Hardi 363 De-Icing Fluid Pump
- Type IV fill system
- In Cab Flow Meters
- Fire extinguisher mounted on unit
- Full body safety harnesses
- Frost Gun
- Remote Tank Level Gauges
- Fire Suppression System
- CE Certification

## Safety Features

- Emergency stops in cab and basket.
- Emergency hydraulic pump control in basket and ground control station
- Boom control in basket and ground control station.
- High Speed Cutout When Boom is Raised
- Driver/Passenger seat belts.

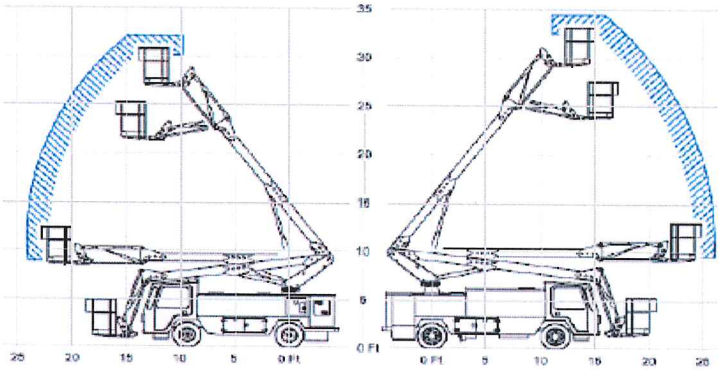



**Ground Support Specialist**

**2205 Cole Road**
**Horn Lake, MS 38637**
**USA**
**Contact: Andrew Pennel**
**Office: (662) 342-1412**
**Email: andrew@gssonline.com**


**Video available at**
***www.gssonline.com***

*Specifications subject to change without notice*

**Ground Support Specialist, LLC**
2205 Cole Road
Horn Lake, MS 38637

*"MEETING TODAY'S GSE NEEDS"*

# *Quotation*

TO: **Nantucket Memorial Airport**
14 Airport Rd
Nantucket, MA 02554

**Attn:** Preston Harimon **Phone:** (508) 325-7569 **email:** pharimon@nantucketairport.com

| SALESPERSON | QUOTE NUMBER | DATE | DELIVERY | EX-FACTORY | TERMS |
|---|---|---|---|---|---|
| Andrew Pennel | 16-9257 | 9/15/2016 | TBD | HORN LAKE, MS (MEMPHIS, TN AREA) | 30% NET |

| QUANTITY | | LIST | NET |
|---|---|---|---|
| 1 | **NEW GS700,** 800 Gallon Aircraft Deicer with Perkins Diesel Engine, Passenger Overhead Window with Wiper System, Type I Mixing System, and David Clark Intercom System. | $194,073.00 | $155,258.00 |
| | ***Options Installed on Unit:*** | | |
| | • Type I and Type IV Flow Meters | $4,038.00 | $3,230.00 |
| | • Battery Heater | $284.00 | $227.00 |
| | • Engine Block Heater | $419.00 | $335.00 |
| | • Flashing/Rotating Beacon | $490.00 | $392.00 |
| | • Full Body Safety Harness | $465.00 | $372.00 |
| | • Rust Prevention Undercoating | $788.00 | $630.00 |
| | • Frost Gun (additional ½" Type I Spray Nozzle) | $1,265.00 | $1,012.00 |
| | • Remote Mounted Electronic Tank Level Gauge | $1,399.00 | $1,119.00 |
| | • FireTrace Fire Suppression System, Automatic | $5,413.00 | $4,330.00 |
| | • Anti-ice Suction Fill System | $1,666.00 | $1,333.00 |
| | • Tank Insulation | $551.00 | $441.00 |
| | • Temperature Gauge at Basket | $485.00 | $388.00 |
| | • Electric Ground Hose Reel | $833.00 | $666.00 |
| | • Spare Wheel and Tire 1 Front & 1 Rear | $1,138.00 | $910.00 |

**THIS QUOTATION IS VALID FOR 30 DAYS**
**AND SUBJECT TO PRIOR SALE.**
**THANK YOU FOR THE OPPORTUNITY TO QUOTE**

**John Deere**

***Source:*** *https://configure.deere.com/cbyo/#/en_us/products/agriculture/cutters_&_shredders/heavy-duty_rotary_cutters*

***Compressor***

*Subtotal* $21,356.00 **we won't be charged sales tax

*Rounded request* $22,000.00

Milton CAT

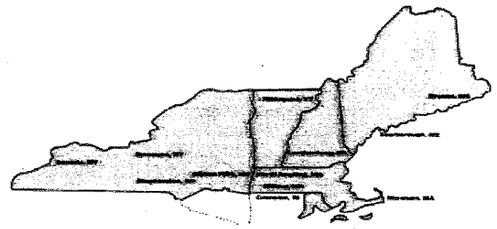

**Southworth-Milton, Inc.**
101 Quarry Drive, Milford, MA 01757

**MILTON CAT RENTAL/SALES AGREEMENT**

**Bill To:** Nantucket Airport
14 Airport Road
Nantucket MA 02554

**Acct #:**
**Ship to:** Same

**Attn:** John Grangrade
**Phone:** 508 566 0909
**Email:** jgrangrade@nantucketairport.com

**Contact:**
**Cell #:**
**Quote #:**
**Date:** 10/4/2016

| Salesperson | P.O. NUMBER | Date Shipped | Shipped Via | F.O.B. Point | Terms |
|---|---|---|---|---|---|
| Audra Wilson. Cell # (508) 278-0527 | | TBD | Cappello | Milford | Net 30 |

| Quantity | Purchase Information | Unit Price | Amount |
|---|---|---|---|
| 1 | Sullair 185-KU DPQ T4F with Cold-Weather Package, Single Hose Reel, 50-foot Hose & MPB-90A (90-pound Breaker) with 1 1/8-inch Chuck Jackhammer. Manufacturer's Warranty to Apply. Delivery Included. | $25,632.50 | $25,632.50 |
| | NJPA 20% Discount | -$5,126.50 | -$5,126.50 |
| | Inbound Freight from Michigan City IN to Milford MA | $850.00 | $850.00 |
| | ***Pricing is Valid for 15-Days*** | | |
| | ***Equipment Offered is Available Subject to Prior Sale or Rental*** | | |
| | | **Subtotal** | **$21,356.00** |
| | | **Sales tax (if applicable)**** | ***6.25%*** |
| | | **Tax Amount** | ***$1,281.62*** |
| | | **Grand Total – Purchase Price** | **$22,637.62** |

**Southworth-Milton must have a copy of valid tax exemption certificate on file & approved to remove these charges

Quote completed by: Audra Wilson

Date: _____ Title: _____

**Email your signed quote back to your contact below.**

If you have any questions concerning this QUOTATION, please contact:

Audra Wilson
Office: (508) 634-5557 or Cellphone: (508) 278-0527
audra_wilson@miltoncat.com

Kathryn Charron
Office: (508) 634-5582 or Cellphone: (774) 217-8879
kathryn_charron@miltoncat.com

**THANK YOU FOR YOUR BUSINESS!**

***Rounding up to $42,000 for options and Don Allen Ford has this model for $36-42k***

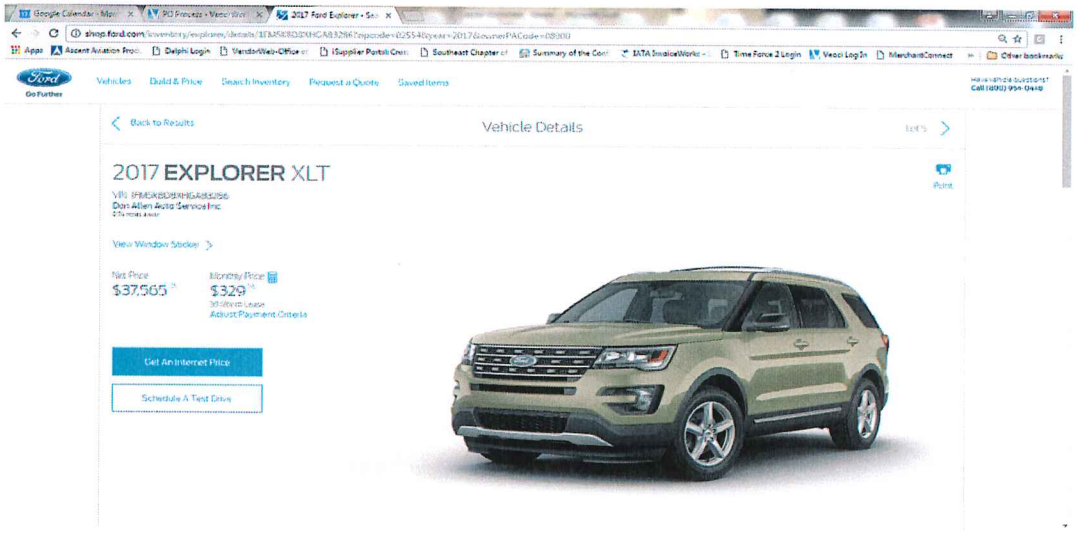

**Project #** NMA-18-002

**Project Name** Extension of Bag Belt

**Department** Airport
**Contact** Tom Rafter
**Type** Equipment
**Useful Life**
**Category** Facilities Upgrades and Improvements
**Priority** 1 Critical

**Fund Type** Enterprise Fund
**Enterprise Fund** Airport
**Location** None

**Total Cost** $200,000

## Description

This project will inistall extend the bag belt at the main ticket counter in the airport terminal.

## Justification

Alternative baggage belt feed at main terminal ticketing lobby to enable Cape Air to divert all FAA Part 139 baggage into an induction feed leading to an explosive detection system (EDS) screening pod

| Expenditures | 2018 | 2019 | 2020 | 2021 | 2022 | 2023 | 2024 | 2025 | 2026 | 2027 | Total |
|---|---|---|---|---|---|---|---|---|---|---|---|
| Equip/Vehicles/Furnishings | 200,000 | | | | | | | | | | 200,000 |
| **Total** | **200,000** | | | | | | | | | | **200,000** |

| Funding Sources | 2018 | 2019 | 2020 | 2021 | 2022 | 2023 | 2024 | 2025 | 2026 | 2027 | Total |
|---|---|---|---|---|---|---|---|---|---|---|---|
| Airport Enterprise Operations | 200,000 | | | | | | | | | | 200,000 |
| **Total** | **200,000** | | | | | | | | | | **200,000** |

## Budget Impact/Other

**Project #** NMA-18-003

**Project Name** Fire Supression System for Fuel Farm

**Department** Airport
**Contact** Tom Rafter
**Type** Equipment
**Useful Life**
**Category** Facilities Upgrades and Improvements
**Priority** 1 Critical

**Fund Type** Enterprise Fund
**Enterprise Fund** Airport
**Location** None

**Total Cost** $70,000

## Description

Replacement of current fire supression system at the airport.

## Justification

One for one replacement of the fuel farm flame detection system. Currently a manual system but has the set up for an automatic system. This is to make this automatic again.

| Expenditures | 2018 | 2019 | 2020 | 2021 | 2022 | 2023 | 2024 | 2025 | 2026 | 2027 | Total |
|---|---|---|---|---|---|---|---|---|---|---|---|
| Equip/Vehicles/Furnishings | 70,000 | | | | | | | | | | 70,000 |
| **Total** | **70,000** | | | | | | | | | | **70,000** |

| Funding Sources | 2018 | 2019 | 2020 | 2021 | 2022 | 2023 | 2024 | 2025 | 2026 | 2027 | Total |
|---|---|---|---|---|---|---|---|---|---|---|---|
| Airport Enterprise Operations | 70,000 | | | | | | | | | | 70,000 |
| **Total** | **70,000** | | | | | | | | | | **70,000** |

## Budget Impact/Other

Replacement of the current fire supression system will reduce the liability at the airport.

| | | |
|---|---|---|
| Construction | 150,000 | |
| Design & Construction Management | 50,000 | |
| | **200,000** | Total Estimate |

**POPULOUS**

Mr. Thomas Rafter, AAE
Airport Manager
Nantucket Memorial Airport
14 Airport Rd, Nantucket, MA 02554

September 27, 2016

Dear Mr. Rafter:

It was a pleasure to meet with you and your team yesterday at Nantucket Memorial Airport (the Airport) to review your baggage belt reconfiguration needs and existing site conditions. Based on our review of the site conditions and the as-built information Janine had graciously provided to us yesterday, I have the following information to share with you.

**PROJECT UNDERSTANDING.** It is Populous Architects and Jacobs Engineering's understanding that the Airport seeks to install an alternative baggage belt feed at the main terminal ticketing lobby to enable Cape Air to conveniently divert all FAA Part-139 baggage into an induction feed leading to an explosives detection system (EDS) screening pod. In order to introduce this additional feed, it is assumed that the Airport will need to procure the renovations through a design-bid-build process.

**ASSUMPTIONS.** From a cursory review of airport-provided documentation and a site visit conducted by Stephen Flecchia, PE of Jacobs Engineering, and Derrick Choi, AIA of Populous Architects; and subsequent review of site photos provided by James McDonald, PE (also of Jacobs) – we are providing a professional opinion on probable costs to install an a new belt at the Main Terminal that assumes:

1. No professional design services have been rendered at this stage,
2. Accordingly, any and all cost assumptions provided are based on professional judgment and experience working on similar airport projects, and
3. Any and all site constraints, code constraints, obstructions and constructability issues identified are based primarily on a combination of visual inspection and high-level review of the as-built documents provided to the team on Monday 26 September, 2016.
4. Additional site conditions of note:

Existing Column Framing

- The alcove with the Cape Air signage is framed by a structural steel column and this area must remain. The belt, however, can be located in the center of the alcove.

Existing Tele/Data Room

- The belt may go through portions of the tele/data room with limited impact to the copper lines (note the black line). However, the relocation of the communications backbone will be wholesale.

**POTENTIAL PROJECT COSTS.** Based on our understanding of the Airport request and the assumptions we have provided, we believe the following project costs can be assumed for a 15'-0" long baggage take-away feed belt project that may have impacts on the existing tele/data room as well as the adjoining ATO and corridor. It is recommended that a highly level project definition study be conducted to refine assumptions as well as design options. Please see the attached descriptions of two options depicting *total project costs* ranging from about **$100,000** to **150,000**.

Sincerely,

Derrick Choi, AIA | NCARB | LEED® - AP
Principal and Director of Aviation, Populous

CC: S. Flecchia and J. McDonald, Jacobs Engineering
J. Torres, Nantucket Memorial Airport

Attachments: ACK Bolt Feed - Options 1 and 2

44 School Street, Suite 715
Boston, MA 02108, USA
T +1 857 415 3642
F +1 857 453 4529
info@populous.com
populous.com

## PLAN DETAIL OPTION 1

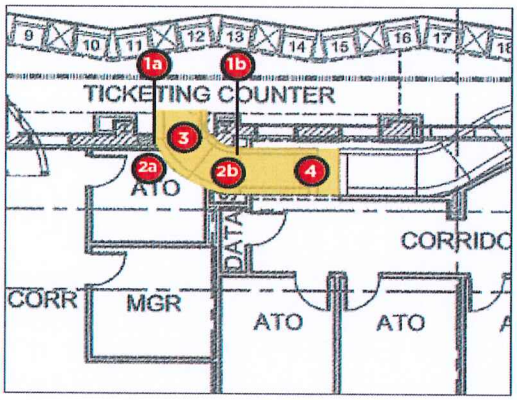


## PROJECT SCOPE

- **1a** **Demolition** of Cape Air soffit & signage alcove
- **1b** Partial **demolition** of telecom room
- **2a** **Restoration** of ATO - wall partitions, ACT, and electrical (lighting)
- **2b** **Restoration** of telecom room - wall partitions, ACT, doors and fiber terminations
- **3** Installation of **gravity-fed roller bed**, inclined (see image below).
- **4** Installation of hinged roller-bed for access to corridor (*note: secondary access may be required for 2nd means of egress). Airport to review with Architect and code inspector to confirm options).*

## OPTION 1 COST SUMMARY

| | | |
|---|---|---|
| 1a,b) | **Interior modifications** | |
| | - Demolition | |
| 2a,b) | - Restoration of ATO, Tele/Data room | |
| | 150 SF x $600/SF = | $ 9,000 |
| | - Reconstruction of tele/data room. Intercept and extend cables to new punch down blocks | $25,000* |
| 3,4) | **Installation of roller bed** | |
| | assume 15 LF x $1,500/SF = | $15,000 |
| Hard costs | | $49,000 |
| Construction contingency (20%) | | $ 9,800 |
| Design contingency* (10%) | | $ 4,900 |
| Soft costs** | | $37,500 |
| PROJECT COST (est) | | **$101,200** |

* JACOBS has provided rough estimates for a complete relocation of the tele/data room. It has been noted that partial relocation is not an option as there appears to be obsolete IT components in the closet that may need to be investigated and removed.

** Soft costs include: Architectural, M/E/P/FP redesign, permitting as well as preparation of bid materials, bid support and construction administration.

## KEY CHARACTERISTICS

**+ Advantages**
- lower cost system with limited maintenance.
- ability to access the existing corridor using a hinged-based roller system.

**- Disadvantages**
- higher induction point
- may be an OSHA concern for staff
- limited conveyor display

44 School Street, Suite 515
Boston, Massachusetts 02108
www.populous.com

POPULOUS

DRAFT - For Internal Review Only
27 September, 2016

## PLAN DETAIL OPTION 2

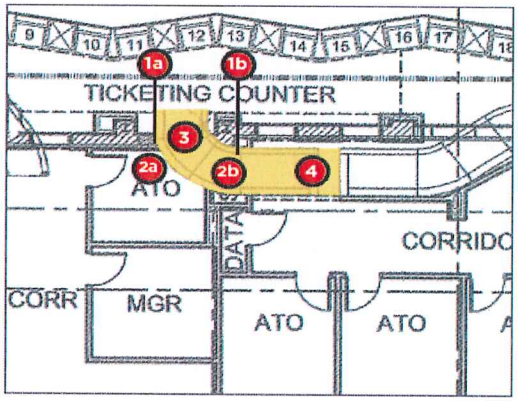


## PROJECT SCOPE

- **1a** **Demolition** of Cape Air soffit & signage alcove
- **1b** Partial **demolition** of telecom room
- **2a** **Restoration** of ATO - wall partitions, ACT, and electrical (lighting)
- **2b** **Restoration** of telecom room - wall partitions, ACT, doors and fiber terminations
- **3** Installation of a level and automated baggage conveyor take-away system (see image below).
- **4** No access permitted for this conveyor option. *Note: secondary access may be required for 2nd means of egress). Airport to review with Architect and code consultant to confirm options).*

## OPTION 2 COST SUMMARY

1a,b) **Interior modifications**
- Demolition

2a) - Restoration of ATO, Tele/Data room
150 SF x $600/SF = $ 9,000

2b) - Reconstruction of tele/data room. Intercept and extend cables to new punch down blocks $25,000*

3,4) **Installation of baggage conveyor**
$50,000

| | |
|---|---|
| Hard costs | $ 84,000 |
| Construction contingency (20%) | $ 16,800 |
| Design contingency* (10%) | $ 8,400 |
| Soft costs** | $ 37,500 |
| PROJECT COST (est) | **$146,700** |

* JACOBS has provided rough estimates for a complete relocation of the tele/data room. It has been noted that partial relocation is not an option as there appears to be obsolete IT components in the closet that may need to be investigated and removed.

** Soft costs include: Architectural, M/E/P/FP redesign, permitting as well as preparation of bid materials, bid support and construction administration.

## KEY CHARACTERISTICS

**+ Advantages**
- induction point is at a level consistent with the other baggage conveyor. Will project a seamless appearance.

**- Disadvantages**
- limited conveyor display
- restricted access to ticketing area from the ATO corridor
- higher first cost & O&M commitment

44 School Street, Suite 515
Boston, Massachusetts 02108
www.populous.com

POPULOUS

**Project #** NMA-18-004

**Project Name** Fuel Farm Piping Replacement

**Department** Airport
**Contact** Tom Rafter
**Type** Maintenance
**Useful Life**
**Category** Facilities Upgrades and Improvements
**Priority** 1 Critical

**Fund Type** Enterprise Fund
**Enterprise Fund** Airport
**Location** None

**Total Cost** $436,100

## Description

"Remove and install new 4 inch Stainless Steel SCH 40 piping & values for Jet A;AvGas & Jet A pump replacement "

## Justification

| Expenditures | 2018 | 2019 | 2020 | 2021 | 2022 | 2023 | 2024 | 2025 | 2026 | 2027 | Total |
|---|---|---|---|---|---|---|---|---|---|---|---|
| Construction/Maintenance | 436,100 | | | | | | | | | | 436,100 |
| **Total** | **436,100** | | | | | | | | | | **436,100** |

| Funding Sources | 2018 | 2019 | 2020 | 2021 | 2022 | 2023 | 2024 | 2025 | 2026 | 2027 | Total |
|---|---|---|---|---|---|---|---|---|---|---|---|
| Airport Enterprise Operations | 436,100 | | | | | | | | | | 436,100 |
| **Total** | **436,100** | | | | | | | | | | **436,100** |

## Budget Impact/Other

*Fuel Farm Pipes Replacement*

| | |
|---|---|
| Removal and installation of piping and valves | $ 400,500.00 |
| AvGas & Jet A Pumps replacement | $ 25,600.00 |
| Cushion | $ 10,000.00 |
| | **$ 436,100.00** ***cost*** |

FW: pipes - Message (HTML)

File | Message

Ignore | Junk | Delete | Reply | Reply All | Forward | Meeting | More | Island Air | To Manager | Team E-mail | Move | Rules | OneNote | Actions | Mark Unread | Categorize | Follow Up | Translate | Find | Related | Select | Zoom

Delete | Respond | Quick Steps | Move | Tags | Editing | Zoom

From: Preston Harimon
To: Tom Rafter; John Grangrade; Jamie Sandsbury; Janine Torres; David Sylvia
Cc:
Subject: FW: pipes
Sent: Fri 9/16/2016 7:04 AM

**From:** John Paradise [mailto:jparadise@lrenvironmental.net]
**Sent:** Friday, September 16, 2016 4:44 AM
**To:** Preston Harimon <pharimon@nantucketairport.com>
**Subject:** Re: pipes

Good Morning Preston,
**Removal & Installation of New 4inch Stainless Steel SCH 40 Piping & Valves: Estimate $ 400,500.00**

**Avgas & Jet A Pumps Replacement Estimate: 25,600.00**

Avgas Blackmer GX3 Pump Assembly w/ HRA 3.40 Gear Reducer 3" *(inlet/outlet)* with 3 phase 10hp Baldor Explosion Proof Electric Motor, 218 GPM@ 50 PSI DP $10,250.00

Jet A Blackmer GX4B Pump Assembly w/ HRA 5.77 Gear Reducer 4" *(inlet/outlet)* with 3 phase 20hp Baldor Explosion Proof Electric Motor, 300 GPM @ 50 PSI DP $15,350.00

Delivery 4-5 Weeks ARO
FOB, Factory MI.

thanks,
John J Paradise
Project Manager / Scheduling
Lakes Region Environmental
*Fuel System Specialist & Equipment*
Ph. (603)-267-7000 ext. 301

Click on a photo to see social network updates and email messages from this person.

Connect to social networks to show profile photos and activity updates of your colleagues in Outlook. Click here to add networks.

**Project #** NMA-18-005

**Project Name** Paint and Beads &Rubber & Markings Removal

**Department** Airport
**Contact** Tom Rafter
**Type** Improvement
**Useful Life**
**Category** Unassigned
**Priority** 1 Critical

**Fund Type** Enterprise Fund
**Enterprise Fund** Airport
**Location** None

**Total Cost** $1,925,580

## Description

First Year of a multi year plan to ensure that the airfield markings meet FAA Part 139

## Justification

FAA Part 139 requires the airfield markings to meet certain standards. NMA has developed a multi year plan to break out the removal and re-painting of the airfield. Previously performed by MASS DOT

| Expenditures | 2018 | 2019 | 2020 | 2021 | 2022 | 2023 | 2024 | 2025 | 2026 | 2027 | Total |
|---|---|---|---|---|---|---|---|---|---|---|---|
| Construction/Maintenance | 176,000 | 481,750 | 264,040 | 41,000 | 176,000 | 481,750 | 264,040 | 41,000 | | | 1,925,580 |
| **Total** | **176,000** | **481,750** | **264,040** | **41,000** | **176,000** | **481,750** | **264,040** | **41,000** | | | **1,925,580** |

| Funding Sources | 2018 | 2019 | 2020 | 2021 | 2022 | 2023 | 2024 | 2025 | 2026 | 2027 | Total |
|---|---|---|---|---|---|---|---|---|---|---|---|
| Airport Enterprise Operations | 176,000 | 481,750 | 264,040 | 41,000 | 176,000 | 481,750 | 264,040 | 41,000 | | | 1,925,580 |
| **Total** | **176,000** | **481,750** | **264,040** | **41,000** | **176,000** | **481,750** | **264,040** | **41,000** | | | **1,925,580** |

## Budget Impact/Other

Reduce our airfield maintenance budget which currently contains a small amount of paint & beads for small repairs when necessary

***Paint and Beads & Rubber & Markings Removal***

| *Bead Type (this is what adds reflection)* | White Paint Type 3 Beads Sq Ft | Black Paint None Sq Ft | Yellow Paint Type 3 Beads Sq Ft | Red Paint Type 1 Beads Sq Ft | Total Sq Ft | $1.05 per Sq Ft (just markings) | $3.05 per Sq Ft (removal) | To Remove & Re-paint | Rounded | | |
|---|---|---|---|---|---|---|---|---|---|---|---|
| Taxiway Echo (TWY A,B,C,D,F,G,H & J) | 1,000 | 20,000 | 20,000 | 2,000 | **43,000** | 45,150 | 131,150 | 176,300 | 176,000 | Year 1 | Year 5 |
| Runway 6-24 | 98,000 | 17,500 | 2,000 | - | **117,500** | 123,375 | 358,375 | 481,750 | 482,000 | Year 2 | Year 6 |
| Runway 15-33 | 50,800 | 13,000 | 600 | - | **64,400** | 67,620 | 196,420 | 264,040 | 264,000 | Year 3 | Year 7 |
| Runway 12-30 | 7,050 | 2,410 | 600 | - | **10,060** | 10,563 | 30,683 | 41,246 | 41,000 | Year 4 | Year 8 |
| | | | | | | **201,558** | **585,478** | **787,036** | | | |

**NOTES**: This was information provided by Stephen Flecchia from October 2015. His estimates at that time to just remove the markings was $3 per square foot and $1 per square foot. We have the square footage total for each portion of the runway and a potential plan to have this work done. The current plan is to break the airfield out into group and have the markings removed and re-painted. The FAA requirement is to have it meet certain standards. Only 4 layers of markings are allowed before it has to be removed (entirely - all layers) and re-painted. The paint has to have a certain level of reflection, which also requires type 3 beads. Type 3 virgin glass and is more expensive & Type 1 are reclaimed glass and is less expensive. Type 1 is not as reflective as type 3. Only red paint is type 1; white & yellow type 3 and the color that we have the smallest amount of is red. Taxiway markings - yellow paint, runway markings - white paint.

The amounts in future years could potentially change if we purchase a waterblasting machine. A waterblasting machine will be able to remove the markings as well as clean markings. Which means some years, just cleaning the markings, we may not have to re-paint (depending on how it works). Ops does inspections daily on the airfield. They have to look at the reflectivity and make a judgement call as to whether or not this needs to be repaired. This machine will clean the marks (rubber deposits) made my plane so the only way to repair this currently is to re-paint. However the machine could clean it and then it wouldn't need to be re-painted.

**Project #** NMA-18-006

**Project Name** Airport Facilty Upgrades and Improvements

**Department** Airport
**Contact** Tom Rafter
**Type** Maintenance
**Useful Life**
**Category** Facilities Upgrades and Improvements
**Priority** 1 Critical

**Fund Type** Enterprise Fund
**Enterprise Fund** Airport
**Location** None

**Total Cost** $52,000

## Description

The following projects are included in this project:

1) Lights on centerline and tochdown zone $ 25,000.00
2) Podiums in TSA hold room $ 15,000.00
3) Repave maintenance road near localizer antenna $ 12,000.00

## Justification

1) Lights on centerline and touchdown zone:New lights to replace unrepairable centerline and touchdown zone lights. 185 lights total, have 20 extra lights on shelf. As they go out we replace them, take the old one back and repair it and put it on the shelve. These are all 20 plus years old, planes have landed on them, and are ultimately becoming irreplaceable.

2)Podiums in TSA hold room:We would like to replace the Jet Blue podium (that they brought in) with one of our own so they match and add an additional podium

3) Repave maintenance road near localizer antenna:A portion of the road has a sag in it and needs to be re-paved.

| Expenditures | 2018 | 2019 | 2020 | 2021 | 2022 | 2023 | 2024 | 2025 | 2026 | 2027 | Total |
|---|---|---|---|---|---|---|---|---|---|---|---|
| Construction/Maintenance | 52,000 | | | | | | | | | | 52,000 |
| **Total** | **52,000** | | | | | | | | | | **52,000** |

| Funding Sources | 2018 | 2019 | 2020 | 2021 | 2022 | 2023 | 2024 | 2025 | 2026 | 2027 | Total |
|---|---|---|---|---|---|---|---|---|---|---|---|
| Airport Enterprise Operations | 52,000 | | | | | | | | | | 52,000 |
| **Total** | **52,000** | | | | | | | | | | **52,000** |

## Budget Impact/Other

1) Lights on centerline and touchdown zone:Less time spent from Maintenance replacing and repairing them.

2) Podiums in TSA hold room: N/A

3) Repave maintenance road near localizer antenna: Save wear and tear on trucks & equipment (suspension repairs)

***Lights on centerline and touchdown zone***

The contract we have gives us taxiway lights (LED lights), runway edge lights, etc. The AIP project in FY19 (Airfield Lighting) is going to replace all 185 lights. FAA requirement to have all going and replace immediately if one goes out. Spares are dwindling because they aren't replaceable. This will get us through until the FY19 AIP project. Is this project going to give us any spares for the new lights that will be put in place? We don't want to over-buy of the old lights either. Current contract is with Crouse Hinds and it's $25k per year due to end in 2018

**COOPER** Crouse-Hinds

Cooper Crouse-Hinds, LLC
Airport Lighting
1200 Kennedy Road
Windsor, CT 06095
Phone: (860) 683-4300
Fax: (860) 683-4354
www.chalp.com

Oct 2012

**Sold-to address**
NANTUCKET MEMORIAL AIRPORT
14 AIRPORT ROAD
NANTUCKET MA 02554-2899
US

**Ship-to address**
NANTUCKET MEMORIAL AIRPORT
14 AIRPORT ROAD
NANTUCKET MA 02554-2899
US

**Incoterms:** Pre-Paid FOB PLANT
**Payment Terms:** Net 30 Days

THIS DOCUMENT INCORPORATES AND IS SUBJECT TO THE ATTACHED TERMS AND CONDITIONS.

| Item | Quantity | UOM | Description | Material No | Price | Ext. Value |
|---|---|---|---|---|---|---|
| Cust.Item Catalog Number | | | | | | |
| Cust.Material Number | | | | | | |
| 10 | 25 | EA | 850B3-CX-P1-R PRO III TDZ | 11875370 | 463.00 | 11,575.00 |
| 20 | 25 | EA | 850B3-CX-P1-L PRO III TDZ | 11875369 | 463.00 | 11,575.00 |
| 30 | 25 | EA | 850A3-CC-P1 RCL CLEAR/CLEAR 1 PLUG | 11875338 | 484.00 | 12,100.00 |
| 40 | 25 | EA | 850A3-CR-P1 PRO III RCL CLR/RED 1 PLG | 11875352 | 490.00 | 12,250.00 |
| Product Subtotal | | | | | | 47,500.00 |
| Final amount in USD | | | | | | 47,500.00 |

increase 2,500
50,000

$25k from current contract
plus 25k request.

***Podiums in TSA hold room***

Currently in the TSA Holding Room there are two podiums (that belong to NMA) and Jet Blue brought there own. We would like to replace Jet Blue's so its ours (because if they leave, the podiums leaves) and so they all match. Additionally, to improve customer service we would like to add a 4th podium. We received a quote for 1 from Stephen Theroux at Nantucket Architectural Group. As such, I doubled the estimate and added a slight cushion.

| | |
|---|---|
| Quote for 1 | $ 6,750.00 |
| Doubled | $ 13,500.00 |
| Cushion | $ 1,500.00 |
| | **$ 15,000.00** |

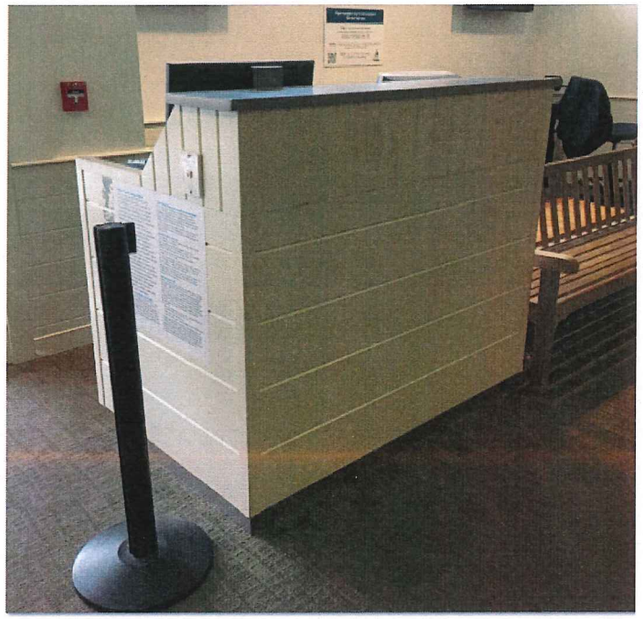

Labor and material quote for a single counter desk
For Stephen Theroux at NAG
By Gorko Inc.
gorko@islandbuilding.net
5083326188

**Item description and estimated cost:**

Framed cabinet construction ¾ birch plywood base, covered by 6"v groove and bead board 2 ½ " x 3/4 mdf paneling.
Provided are four removable wheels at the base.
Price includes finish paint and a double decked marble counter top.

**Total : $ 6,750.00**

Gorko Inc.
48 b Macy ln. Nantucket MA 02554
gorko@islandbuilding.net
508 332 6188

***Repave maintenance road near localizer antenna***

This is a perimeter maintenance road that is used by staff to go back and forth from the terminal to the bunker area (where SRE building is). A portion of the road has a sag in it. Has been cut out and repaved once already however the area has settled again (over the last 10 years). Last winter, maintenance cut the patch out, dug the surface down and re-packed it to with stand the weight of the trucks that need to go back and forth. So maintenance filled the sag with grindings and seems to have cured the problem since there is no sign of re-sagging, so it can be re-paved. Section is 40' long x 20' wide and Victor says it will be $12k (under town contract)

**Project #** NMA-18-007

**Project Name** 5 Year CIP EA/EIR Permitting

**Department** Airport
**Contact** Tom Rafter
**Type** Improvement
**Useful Life**
**Category** Facilities Upgrades and Improvements
**Priority** 1 Critical

**Fund Type** Enterprise Fund
**Enterprise Fund** Airport
**Location** None

**Total Cost** $750,000

## Description

This is an environmental project that is required as part of the master plan work.

## Justification

This is environmental work that is required prior to implementing various Master Plan related projects. This is a request for additional authorization as the estimate provided by our engineering consultants has increased

| Prior | Expenditures | 2018 | 2019 | 2020 | 2021 | 2022 | 2023 | 2024 | 2025 | 2026 | 2027 | Total |
|---|---|---|---|---|---|---|---|---|---|---|---|---|
| 300,000 | Planning/Design | 450,000 | | | | | | | | | | 450,000 |
| Total | Total | 450,000 | | | | | | | | | | 450,000 |

| Prior | Funding Sources | 2018 | 2019 | 2020 | 2021 | 2022 | 2023 | 2024 | 2025 | 2026 | 2027 | Total |
|---|---|---|---|---|---|---|---|---|---|---|---|---|
| 300,000 | AIP Grant | 405,000 | | | | | | | | | | 405,000 |
| Total | Airport Enterprise Operations | 45,000 | | | | | | | | | | 45,000 |
| | Total | 450,000 | | | | | | | | | | 450,000 |

## Budget Impact/Other

**Project #** NMA-18-008

**Project Name** ALP Update and SMS and Narrative

**Department** Airport
**Contact** Tom Rafter
**Type** Unassigned
**Useful Life**
**Category** Facilities Upgrades and Improvements
**Priority** n/a

**Fund Type** Enterprise Fund
**Enterprise Fund** Airport
**Location** None

**Total Cost** $250,000

## Description

ALP Update with SMS and Narrative to focus on non-standard pavement geometry. This would consist of pavement projects that FAA is standardizing across the county. For example, edges of pavement on taxiway connectors and taxiway/runway intersections would change to either widen the width or square them off perpendicular to one another for visual safety purposes.

## Justification

For example, edges of pavement on taxiway connectors and taxiway/runway intersections would change to either widen the width or square them off perpendicular to one another for visual safety purposes.

| Expenditures | 2018 | 2019 | 2020 | 2021 | 2022 | 2023 | 2024 | 2025 | 2026 | 2027 | Total |
|---|---|---|---|---|---|---|---|---|---|---|---|
| Construction/Maintenance | 250,000 | | | | | | | | | | 250,000 |
| **Total** | **250,000** | | | | | | | | | | **250,000** |

| Funding Sources | 2018 | 2019 | 2020 | 2021 | 2022 | 2023 | 2024 | 2025 | 2026 | 2027 | Total |
|---|---|---|---|---|---|---|---|---|---|---|---|
| AIP Grant | 225,000 | | | | | | | | | | 225,000 |
| Airport Enterprise Operations | 25,000 | | | | | | | | | | 25,000 |
| **Total** | **250,000** | | | | | | | | | | **250,000** |

## Budget Impact/Other

**Project #** NMA-18-009

**Project Name** Reconstruct Apron Area 3/Replace Fence

**Department** Airport
**Contact** Tom Rafter
**Type** Improvement
**Useful Life**
**Category** Facilities Upgrades and Improvements
**Priority** 1 Critical

**Fund Type** Enterprise Fund
**Enterprise Fund** Airport
**Location** None

**Total Cost** $2,200,000

## Description

This project will reconstruct the Apron Area 3 and replace 5,500 feet of fencing at the airport.

## Justification

Area of the north ramp originally designed (20 plus years ago) for lighter single and twin aircraft which today is used for much heavier aircraft such as JetBlue's E190's. The pavement needs to be reconstructed in order to handle today's fleet mix.

| Expenditures | 2018 | 2019 | 2020 | 2021 | 2022 | 2023 | 2024 | 2025 | 2026 | 2027 | Total |
|---|---|---|---|---|---|---|---|---|---|---|---|
| Construction/Maintenance | 2,200,000 | | | | | | | | | | 2,200,000 |
| **Total** | **2,200,000** | | | | | | | | | | **2,200,000** |

| Funding Sources | 2018 | 2019 | 2020 | 2021 | 2022 | 2023 | 2024 | 2025 | 2026 | 2027 | Total |
|---|---|---|---|---|---|---|---|---|---|---|---|
| AIP Grant | 1,980,000 | | | | | | | | | | 1,980,000 |
| Airport Enterprise Operations | 220,000 | | | | | | | | | | 220,000 |
| **Total** | **2,200,000** | | | | | | | | | | **2,200,000** |

## Budget Impact/Other

## AIP PROJECTS

This is the FAA CIP Schedule. The FAA fiscal year is October to September. The purple section labeled 2017 corresponds to our FY18. Since this schedule has been completed, the project 1 in Master Plan section 4 (5 year CIP EA/EIR Permitting), has moved up to section 3. NMA already has $300,000 authorized for this project and requesting supplemental authorization for the remaining $450k.

NANTUCKET MEMORIAL AIRPORT

*NANTUCKET MEMORIAL AIRPORT - FIVE YEAR FAA CIP*

*UPDATED 8/19/2016*

| MASTER PLAN YEAR | PROJECT | 2016 (@ 90% FAA Reimb.; 5% STATE; 5% ACK) | FAA Entitlement | FAA Discretionary | MASS DOT | AIRPORT | TOTAL |
|---|---|---|---|---|---|---|---|
| 2 | 1 | "PA\FIDS Improvements (Security\ADA Compliance)" | $380,838 | | $21,158 | $21,158 | $423,153 |
| | 2 | "Replace Airfield Lighting Vault Equipment" | $1,148,850 | | $63,825 | $63,825 | $1,276,500 |
| | 3 | "Purchase Interactive Computer SIDA Training System" | $194,262 | | $10,792 | $10,792 | $215,847 |
| | | Sub-Total Projects 1 thru 3 | $1,723,950 | | $95,775 | $95,775 | $1,915,500 |
| | | FY '16 Estimated ENTITLEMENT | $1,700,000 | | | | |
| | | Unused Entitlement from FY '15 | $819,840 | | | | |
| | | CARRYOVER FROM FY 2016 to 2017 | $795,890 | | | | |

| | PROJECT | 2017 (@ 90% FAA Reimb.; 5% STATE; 5% ACK) | FAA Entitlement | FAA Discretionary | MASS DOT | AIRPORT | TOTAL |
|---|---|---|---|---|---|---|---|
| 3 | 1 | "Reconstruct Apron Area "3" (Approx. 141,625 S.F.) per the Master Plan" | $1,845,000 | $0 | $102,500 | $102,500 | $2,050,000 |
| | 2 | "Replace 5,000 Feet of Fence" | $135,000 | $0 | $7,500 | $7,500 | $150,000 |
| | 3 | "ALP Update with SMS and Narrative (to focus on non standard pavement geometry)" | $15,890 | $209,110 | $12,500 | $12,500 | $250,000 |
| | | Sub-Total Projects 1 thru 2 | $1,995,890 | | $110,000 | $110,000 | $2,200,000 |
| | | FY '17 Estimated ENTITLEMENT | $1,200,000 | | | | |
| | | Unused Entitlement from FY '16 | $795,890 | | | | |
| | | CARRYOVER FROM FY 2017 to 2018 | $0 | | | | |

| | PROJECT | 2018 (@ 90% FAA Reimb.; 5% STATE: 5% ACK) | FAA Entitlement | FAA Discretionary | MASS DOT | AIRPORT | TOTAL |
|---|---|---|---|---|---|---|---|
| 4 | 1 | "5 Year CIP EA/EIR Permitting" | $369,890 | $305,110 | $37,500 | $37,500 | $750,000 |
| | 2 | "Security Improvements" (Access Control) (Min. Standards for TSA)" | $504,000 | | $28,000 | $28,000 | $560,000 |
| | 3 | "Airfield Lighting Project (Replace CL & TDZ Lights on R/W 6-24" | $216,000 | $468,000 | $38,000 | $38,000 | $760,000 |
| | | Sub-Total Projects 1 thru 3 | $1,089,890 | $773,110 | $103,500 | $103,500 | $2,070,000 |
| | | FY '18 Estimated ENTITLEMENT | $1,200,000 | | | | |
| | | Unused Entitlement from FY '17 | $0 | | | | |
| | | CARRYOVER FROM FY 2018 to 2019 | $0 | | | | |

**Project #** NMA-19-001

**Project Name** Airport Operations/ARFF

**Department** Airport
**Contact** Tom Rafter
**Type** Unassigned
**Useful Life**
**Category** Unassigned
**Priority** 1 Critical

**Fund Type** Enterprise Fund
**Enterprise Fund** Airport
**Location** None

**Total Cost** $219,000

## Description

## Justification

| Expenditures | 2018 | 2019 | 2020 | 2021 | 2022 | 2023 | 2024 | 2025 | 2026 | 2027 | Total |
|---|---|---|---|---|---|---|---|---|---|---|---|
| Other | | 219,000 | | | | | | | | | 219,000 |
| **Total** | | **219,000** | | | | | | | | | **219,000** |

| Funding Sources | 2018 | 2019 | 2020 | 2021 | 2022 | 2023 | 2024 | 2025 | 2026 | 2027 | Total |
|---|---|---|---|---|---|---|---|---|---|---|---|
| AIP Grant | | 150,000 | | | | | | | | | 150,000 |
| Airport Enterprise Operations | | 69,000 | | | | | | | | | 69,000 |
| **Total** | | **219,000** | | | | | | | | | **219,000** |

## Budget Impact/Other

**Project #** NMA-19-002

**Project Name** Airport Maintenance & Equipment

**Department** Airport
**Contact** Tom Rafter
**Type** Unassigned
**Useful Life**
**Category** Unassigned
**Priority** n/a

**Fund Type** Enterprise Fund
**Enterprise Fund** Airport
**Location** None

**Total Cost** $140,000

## Description

## Justification

| Expenditures | 2018 | 2019 | 2020 | 2021 | 2022 | 2023 | 2024 | 2025 | 2026 | 2027 | Total |
|---|---|---|---|---|---|---|---|---|---|---|---|
| Other | | 140,000 | | | | | | | | | 140,000 |
| **Total** | | **140,000** | | | | | | | | | **140,000** |

| Funding Sources | 2018 | 2019 | 2020 | 2021 | 2022 | 2023 | 2024 | 2025 | 2026 | 2027 | Total |
|---|---|---|---|---|---|---|---|---|---|---|---|
| Airport Enterprise Operations | | 140,000 | | | | | | | | | 140,000 |
| **Total** | | **140,000** | | | | | | | | | **140,000** |

## Budget Impact/Other

**Project #** NMA-19-003

**Project Name** Airport Information Technology

**Department** Airport
**Contact** Tom Rafter
**Type** Unassigned
**Useful Life**
**Category** Unassigned
**Priority** 1 Critical

**Fund Type** Enterprise Fund
**Enterprise Fund** Airport
**Location** None

**Total Cost** $7,500

## Description

## Justification

| Expenditures | 2018 | 2019 | 2020 | 2021 | 2022 | 2023 | 2024 | 2025 | 2026 | 2027 | Total |
|---|---|---|---|---|---|---|---|---|---|---|---|
| Other | | 7,500 | | | | | | | | | 7,500 |
| **Total** | | **7,500** | | | | | | | | | **7,500** |

| Funding Sources | 2018 | 2019 | 2020 | 2021 | 2022 | 2023 | 2024 | 2025 | 2026 | 2027 | Total |
|---|---|---|---|---|---|---|---|---|---|---|---|
| Airport Enterprise Operations | | 7,500 | | | | | | | | | 7,500 |
| **Total** | | **7,500** | | | | | | | | | **7,500** |

## Budget Impact/Other

**Project #** NMA-19-004

**Project Name** Airport Security

**Department** Airport
**Contact** Tom Rafter
**Type** Unassigned
**Useful Life**
**Category** Unassigned
**Priority** 1 Critical

**Fund Type** Enterprise Fund
**Enterprise Fund** Airport
**Location** None

**Total Cost** $32,000

## Description

## Justification

| Expenditures | 2018 | 2019 | 2020 | 2021 | 2022 | 2023 | 2024 | 2025 | 2026 | 2027 | Total |
|---|---|---|---|---|---|---|---|---|---|---|---|
| Equip/Vehicles/Furnishings | | 32,000 | | | | | | | | | 32,000 |
| **Total** | | **32,000** | | | | | | | | | **32,000** |

| Funding Sources | 2018 | 2019 | 2020 | 2021 | 2022 | 2023 | 2024 | 2025 | 2026 | 2027 | Total |
|---|---|---|---|---|---|---|---|---|---|---|---|
| Airport Enterprise Operations | | 32,000 | | | | | | | | | 32,000 |
| **Total** | | **32,000** | | | | | | | | | **32,000** |

## Budget Impact/Other

**Project #** NMA-19-005

**Project Name** Fuel Farm Expansion & Rehab

**Department** Airport
**Contact** Tom Rafter
**Type** Unassigned
**Useful Life**
**Category** Unassigned
**Priority** 1 Critical

**Fund Type** Enterprise Fund
**Enterprise Fund** Airport
**Location** None

**Total Cost** $650,000

## Description

## Justification

| Expenditures | 2018 | 2019 | 2020 | 2021 | 2022 | 2023 | 2024 | 2025 | 2026 | 2027 | Total |
|---|---|---|---|---|---|---|---|---|---|---|---|
| Other | | 650,000 | | | | | | | | | 650,000 |
| **Total** | | **650,000** | | | | | | | | | **650,000** |

| Funding Sources | 2018 | 2019 | 2020 | 2021 | 2022 | 2023 | 2024 | 2025 | 2026 | 2027 | Total |
|---|---|---|---|---|---|---|---|---|---|---|---|
| Airport Enterprise Operations | | 650,000 | | | | | | | | | 650,000 |
| **Total** | | **650,000** | | | | | | | | | **650,000** |

## Budget Impact/Other

**Project #** NMA-19-006

**Project Name** Runway 24 High Speed taxiway

**Department** Airport
**Contact** Tom Rafter
**Type** Maintenance
**Useful Life**
**Category** Unassigned
**Priority** 1 Critical

**Fund Type** Enterprise Fund
**Enterprise Fund** Airport
**Location** None

**Total Cost** $775,000

## Description

## Justification

| Expenditures | 2018 | 2019 | 2020 | 2021 | 2022 | 2023 | 2024 | 2025 | 2026 | 2027 | Total |
|---|---|---|---|---|---|---|---|---|---|---|---|
| Other | | 775,000 | | | | | | | | | 775,000 |
| **Total** | | **775,000** | | | | | | | | | **775,000** |

| Funding Sources | 2018 | 2019 | 2020 | 2021 | 2022 | 2023 | 2024 | 2025 | 2026 | 2027 | Total |
|---|---|---|---|---|---|---|---|---|---|---|---|
| AIP Grant | | 775,000 | | | | | | | | | 775,000 |
| **Total** | | **775,000** | | | | | | | | | **775,000** |

## Budget Impact/Other

**Project #** NMA-19-007

**Project Name** Centerline TDZ Replacement

**Department** Airport
**Contact** Tom Rafter
**Type** Unassigned
**Useful Life**
**Category** Unassigned
**Priority** 1 Critical

**Fund Type** Enterprise Fund
**Enterprise Fund** Airport
**Location** None

**Total Cost** $1,200,000

## Description

## Justification

| Expenditures | 2018 | 2019 | 2020 | 2021 | 2022 | 2023 | 2024 | 2025 | 2026 | 2027 | Total |
|---|---|---|---|---|---|---|---|---|---|---|---|
| Other | | 1,200,000 | | | | | | | | | 1,200,000 |
| **Total** | | **1,200,000** | | | | | | | | | **1,200,000** |

| Funding Sources | 2018 | 2019 | 2020 | 2021 | 2022 | 2023 | 2024 | 2025 | 2026 | 2027 | Total |
|---|---|---|---|---|---|---|---|---|---|---|---|
| AIP Grant | | 1,200,000 | | | | | | | | | 1,200,000 |
| **Total** | | **1,200,000** | | | | | | | | | **1,200,000** |

## Budget Impact/Other

**Project #** NMA-19-008

**Project Name** Air Curtains in Bag Claim and Enterance

**Department** Airport
**Contact** Tom Rafter
**Type** Unassigned
**Useful Life**
**Category** Unassigned
**Priority** n/a

**Fund Type** Enterprise Fund
**Enterprise Fund** Airport
**Location** None

**Total Cost** $80,000

## Description

## Justification

| Expenditures | 2018 | 2019 | 2020 | 2021 | 2022 | 2023 | 2024 | 2025 | 2026 | 2027 | Total |
|---|---|---|---|---|---|---|---|---|---|---|---|
| Equip/Vehicles/Furnishings | | 80,000 | | | | | | | | | 80,000 |
| **Total** | | **80,000** | | | | | | | | | **80,000** |

| Funding Sources | 2018 | 2019 | 2020 | 2021 | 2022 | 2023 | 2024 | 2025 | 2026 | 2027 | Total |
|---|---|---|---|---|---|---|---|---|---|---|---|
| Airport Enterprise Operations | | 80,000 | | | | | | | | | 80,000 |
| **Total** | | **80,000** | | | | | | | | | **80,000** |

## Budget Impact/Other

**Project #** NMA-20-001

**Project Name** Nantucket Operations & ARFF

**Department** Airport
**Contact** Tom Rafter
**Type** Equipment
**Useful Life**
**Category** Unassigned
**Priority** 1 Critical

**Fund Type** Enterprise Fund
**Enterprise Fund** Airport
**Location** None

**Total Cost** $194,000

## Description

## Justification

| Expenditures | 2018 | 2019 | 2020 | 2021 | 2022 | 2023 | 2024 | 2025 | 2026 | 2027 | Total |
|---|---|---|---|---|---|---|---|---|---|---|---|
| Other | | | 194,000 | | | | | | | | 194,000 |
| **Total** | | | **194,000** | | | | | | | | **194,000** |

| Funding Sources | 2018 | 2019 | 2020 | 2021 | 2022 | 2023 | 2024 | 2025 | 2026 | 2027 | Total |
|---|---|---|---|---|---|---|---|---|---|---|---|
| Airport Enterprise Operations | | | 194,000 | | | | | | | | 194,000 |
| **Total** | | | **194,000** | | | | | | | | **194,000** |

## Budget Impact/Other

**Project #** NMA-20-002

**Project Name** Nantucket Airport Maintenance & Equipment

**Department** Airport
**Contact** Tom Rafter
**Type** Equipment
**Useful Life**
**Category** Unassigned
**Priority** n/a

**Fund Type** Enterprise Fund
**Enterprise Fund** Airport
**Location** None

**Total Cost** $27,000

## Description

## Justification

| Expenditures | 2018 | 2019 | 2020 | 2021 | 2022 | 2023 | 2024 | 2025 | 2026 | 2027 | Total |
|---|---|---|---|---|---|---|---|---|---|---|---|
| Equip/Vehicles/Furnishings | | | 27,000 | | | | | | | | 27,000 |
| **Total** | | | **27,000** | | | | | | | | **27,000** |

| Funding Sources | 2018 | 2019 | 2020 | 2021 | 2022 | 2023 | 2024 | 2025 | 2026 | 2027 | Total |
|---|---|---|---|---|---|---|---|---|---|---|---|
| Airport Enterprise Operations | | | 27,000 | | | | | | | | 27,000 |
| **Total** | | | **27,000** | | | | | | | | **27,000** |

## Budget Impact/Other

**Project #** NMA-20-003

**Project Name** Nantucket Airport Security

**Department** Airport
**Contact** Tom Rafter
**Type** Equipment
**Useful Life**
**Category** Unassigned
**Priority** n/a

**Fund Type** Enterprise Fund
**Enterprise Fund** Airport
**Location** None

**Total Cost** $42,250

## Description

## Justification

| Expenditures | 2018 | 2019 | 2020 | 2021 | 2022 | 2023 | 2024 | 2025 | 2026 | 2027 | Total |
|---|---|---|---|---|---|---|---|---|---|---|---|
| Equip/Vehicles/Furnishings | | | 42,250 | | | | | | | | 42,250 |
| **Total** | | | **42,250** | | | | | | | | **42,250** |

| Funding Sources | 2018 | 2019 | 2020 | 2021 | 2022 | 2023 | 2024 | 2025 | 2026 | 2027 | Total |
|---|---|---|---|---|---|---|---|---|---|---|---|
| Airport Enterprise Operations | | | 42,250 | | | | | | | | 42,250 |
| **Total** | | | **42,250** | | | | | | | | **42,250** |

## Budget Impact/Other

**Project #** NMA-20-004

**Project Name** Parallel taxiway to 15/33

**Department** Airport

**Contact**

**Type** Improvement

**Useful Life**

**Category** Unassigned

**Priority** 1 Critical

**Fund Type** Enterprise Fund

**Enterprise Fund** Airport

**Location** None

**Total Cost** $1,500,000

## Description

## Justification

| Expenditures | 2018 | 2019 | 2020 | 2021 | 2022 | 2023 | 2024 | 2025 | 2026 | 2027 | Total |
|---|---|---|---|---|---|---|---|---|---|---|---|
| Construction/Maintenance | | | 1,500,000 | | | | | | | | 1,500,000 |
| **Total** | | | **1,500,000** | | | | | | | | **1,500,000** |

| Funding Sources | 2018 | 2019 | 2020 | 2021 | 2022 | 2023 | 2024 | 2025 | 2026 | 2027 | Total |
|---|---|---|---|---|---|---|---|---|---|---|---|
| AIP Grant | | | 1,500,000 | | | | | | | | 1,500,000 |
| **Total** | | | **1,500,000** | | | | | | | | **1,500,000** |

## Budget Impact/Other

**Project #** NMA-20-005

**Project Name** South Apron Extension

**Department** Airport
**Contact** Tom Rafter
**Type** Improvement
**Useful Life**
**Category** Unassigned
**Priority** 1 Critical

**Fund Type** Enterprise Fund
**Enterprise Fund** Airport
**Location** None

**Total Cost** $4,600,000

## Description

## Justification

| Expenditures | 2018 | 2019 | 2020 | 2021 | 2022 | 2023 | 2024 | 2025 | 2026 | 2027 | Total |
|---|---|---|---|---|---|---|---|---|---|---|---|
| Construction/Maintenance | | | 2,100,000 | | 2,500,000 | | | | | | 4,600,000 |
| **Total** | | | **2,100,000** | | **2,500,000** | | | | | | **4,600,000** |

| Funding Sources | 2018 | 2019 | 2020 | 2021 | 2022 | 2023 | 2024 | 2025 | 2026 | 2027 | Total |
|---|---|---|---|---|---|---|---|---|---|---|---|
| AIP Grant | | | 2,100,000 | | 2,500,000 | | | | | | 4,600,000 |
| **Total** | | | **2,100,000** | | **2,500,000** | | | | | | **4,600,000** |

## Budget Impact/Other

**Project #** NMA-20-006

**Project Name** Wastewater treatment/upgrade

**Department** Airport
**Contact**
**Type** Maintenance
**Useful Life**
**Category** Unassigned
**Priority** 1 Critical

**Fund Type** Enterprise Fund
**Enterprise Fund** Airport
**Location** None

**Total Cost** $125,000

## Description

## Justification

| Expenditures | 2018 | 2019 | 2020 | 2021 | 2022 | 2023 | 2024 | 2025 | 2026 | 2027 | Total |
|---|---|---|---|---|---|---|---|---|---|---|---|
| Other | | | 125,000 | | | | | | | | 125,000 |
| **Total** | | | **125,000** | | | | | | | | **125,000** |

| Funding Sources | 2018 | 2019 | 2020 | 2021 | 2022 | 2023 | 2024 | 2025 | 2026 | 2027 | Total |
|---|---|---|---|---|---|---|---|---|---|---|---|
| Airport Enterprise Operations | | | 125,000 | | | | | | | | 125,000 |
| **Total** | | | **125,000** | | | | | | | | **125,000** |

## Budget Impact/Other

**Project #** NMA-20-007

**Project Name** Generator Rehabs

**Department** Airport

**Contact**

**Type** Maintenance

**Useful Life**

**Category** Unassigned

**Priority** 1 Critical

**Fund Type** Enterprise Fund

**Enterprise Fund** Airport

**Location** None

**Total Cost** $75,000

## Description

## Justification

| Expenditures | 2018 | 2019 | 2020 | 2021 | 2022 | 2023 | 2024 | 2025 | 2026 | 2027 | Total |
|---|---|---|---|---|---|---|---|---|---|---|---|
| Equip/Vehicles/Furnishings | | | 75,000 | | | | | | | | 75,000 |
| **Total** | | | **75,000** | | | | | | | | **75,000** |

| Funding Sources | 2018 | 2019 | 2020 | 2021 | 2022 | 2023 | 2024 | 2025 | 2026 | 2027 | Total |
|---|---|---|---|---|---|---|---|---|---|---|---|
| Airport Enterprise Operations | | | 75,000 | | | | | | | | 75,000 |
| **Total** | | | **75,000** | | | | | | | | **75,000** |

## Budget Impact/Other

**Project #** NMA-20-008

**Project Name** Taxiway E run up pads mill overlay

**Department** Airport
**Contact** Tom Rafter
**Type** Improvement
**Useful Life**
**Category** Unassigned
**Priority** 1 Critical

**Fund Type** Enterprise Fund
**Enterprise Fund** Airport
**Location** None

**Total Cost** $4,500,000

## Description

## Justification

| Expenditures | 2018 | 2019 | 2020 | 2021 | 2022 | 2023 | 2024 | 2025 | 2026 | 2027 | Total |
|---|---|---|---|---|---|---|---|---|---|---|---|
| Other | | | 4,500,000 | | | | | | | | 4,500,000 |
| **Total** | | | **4,500,000** | | | | | | | | **4,500,000** |

| Funding Sources | 2018 | 2019 | 2020 | 2021 | 2022 | 2023 | 2024 | 2025 | 2026 | 2027 | Total |
|---|---|---|---|---|---|---|---|---|---|---|---|
| AIP Grant | | | 4,500,000 | | | | | | | | 4,500,000 |
| **Total** | | | **4,500,000** | | | | | | | | **4,500,000** |

## Budget Impact/Other

**Project #** NMA-21-0004

**Project Name** Environmental - Buy out Bunker Mitigation

**Department** Airport
**Contact** Tom Rafter
**Type** Unassigned
**Useful Life**
**Category** Unassigned
**Priority** 1 Critical

**Fund Type** Enterprise Fund
**Enterprise Fund** Airport
**Location** None

**Total Cost** $900,000

## Description

## Justification

| Expenditures | 2018 | 2019 | 2020 | 2021 | 2022 | 2023 | 2024 | 2025 | 2026 | 2027 | Total |
|---|---|---|---|---|---|---|---|---|---|---|---|
| Other | | | | 900,000 | | | | | | | 900,000 |
| **Total** | | | | **900,000** | | | | | | | **900,000** |

| Funding Sources | 2018 | 2019 | 2020 | 2021 | 2022 | 2023 | 2024 | 2025 | 2026 | 2027 | Total |
|---|---|---|---|---|---|---|---|---|---|---|---|
| Airport Enterprise Operations | | | | 900,000 | | | | | | | 900,000 |
| **Total** | | | | **900,000** | | | | | | | **900,000** |

## Budget Impact/Other

**Project #** NMA-21-001

**Project Name** Nantucket Operations & ARFF

**Department** Airport
**Contact** Tom Rafter
**Type** Equipment
**Useful Life**
**Category** Unassigned
**Priority** 1 Critical

**Fund Type** Enterprise Fund
**Enterprise Fund** Airport
**Location** None

**Total Cost** $25,000

## Description

## Justification

| Expenditures | 2018 | 2019 | 2020 | 2021 | 2022 | 2023 | 2024 | 2025 | 2026 | 2027 | Total |
|---|---|---|---|---|---|---|---|---|---|---|---|
| Equip/Vehicles/Furnishings | | | | 25,000 | | | | | | | 25,000 |
| **Total** | | | | **25,000** | | | | | | | **25,000** |

| Funding Sources | 2018 | 2019 | 2020 | 2021 | 2022 | 2023 | 2024 | 2025 | 2026 | 2027 | Total |
|---|---|---|---|---|---|---|---|---|---|---|---|
| Airport Enterprise Operations | | | | 25,000 | | | | | | | 25,000 |
| **Total** | | | | **25,000** | | | | | | | **25,000** |

## Budget Impact/Other

**Project #** NMA-21-002

**Project Name** SRE Expansion

**Department** Airport

**Contact** Tom Rafter

**Type** Improvement

**Useful Life**

**Category** Unassigned

**Priority** 1 Critical

**Fund Type** Enterprise Fund

**Enterprise Fund** Airport

**Location** None

**Total Cost** $2,500,000

## Description

## Justification

| Expenditures | 2018 | 2019 | 2020 | 2021 | 2022 | 2023 | 2024 | 2025 | 2026 | 2027 | Total |
|---|---|---|---|---|---|---|---|---|---|---|---|
| Construction/Maintenance | | | | 2,500,000 | | | | | | | 2,500,000 |
| **Total** | | | | **2,500,000** | | | | | | | **2,500,000** |

| Funding Sources | 2018 | 2019 | 2020 | 2021 | 2022 | 2023 | 2024 | 2025 | 2026 | 2027 | Total |
|---|---|---|---|---|---|---|---|---|---|---|---|
| AIP Grant | | | | 2,500,000 | | | | | | | 2,500,000 |
| **Total** | | | | **2,500,000** | | | | | | | **2,500,000** |

## Budget Impact/Other

**Project #** NMA-21-003

**Project Name** Restaurant Hood make up air replacement

**Department** Airport
**Contact** Tom Rafter
**Type** Equipment
**Useful Life**
**Category** Equipment: Miscellaneous
**Priority** 1 Critical

**Fund Type** Enterprise Fund
**Enterprise Fund** Airport
**Location** None

**Total Cost** $250,000

## Description

## Justification

| Expenditures | 2018 | 2019 | 2020 | 2021 | 2022 | 2023 | 2024 | 2025 | 2026 | 2027 | Total |
|---|---|---|---|---|---|---|---|---|---|---|---|
| Equip/Vehicles/Furnishings | | | | 250,000 | | | | | | | 250,000 |
| **Total** | | | | **250,000** | | | | | | | **250,000** |

| Funding Sources | 2018 | 2019 | 2020 | 2021 | 2022 | 2023 | 2024 | 2025 | 2026 | 2027 | Total |
|---|---|---|---|---|---|---|---|---|---|---|---|
| Airport Enterprise Operations | | | | 250,000 | | | | | | | 250,000 |
| **Total** | | | | **250,000** | | | | | | | **250,000** |

## Budget Impact/Other

**Project #** NMA-22-001

**Project Name** Nantucket Operations & ARFF

**Department** Airport
**Contact** Tom Rafter
**Type** Equipment
**Useful Life**
**Category** Equipment: Miscellaneous
**Priority** 1 Critical

**Fund Type** Enterprise Fund
**Enterprise Fund** Airport
**Location** None

**Total Cost** $154,000

## Description

## Justification

| Expenditures | 2018 | 2019 | 2020 | 2021 | 2022 | 2023 | 2024 | 2025 | 2026 | 2027 | Total |
|---|---|---|---|---|---|---|---|---|---|---|---|
| Equip/Vehicles/Furnishings | | | | | 154,000 | | | | | | 154,000 |
| **Total** | | | | | **154,000** | | | | | | **154,000** |

| Funding Sources | 2018 | 2019 | 2020 | 2021 | 2022 | 2023 | 2024 | 2025 | 2026 | 2027 | Total |
|---|---|---|---|---|---|---|---|---|---|---|---|
| Airport Enterprise Operations | | | | | 154,000 | | | | | | 154,000 |
| **Total** | | | | | **154,000** | | | | | | **154,000** |

## Budget Impact/Other

**Project #** NMA-23-001

**Project Name** Nantucket Airport Information Technology

**Department** Airport
**Contact** Tom Rafter
**Type** Equipment
**Useful Life**
**Category** Unassigned
**Priority** 1 Critical

**Fund Type** Enterprise Fund
**Enterprise Fund** Airport
**Location** None

**Total Cost** $46,500

## Description

## Justification

| Expenditures | 2018 | 2019 | 2020 | 2021 | 2022 | 2023 | 2024 | 2025 | 2026 | 2027 | Total |
|---|---|---|---|---|---|---|---|---|---|---|---|
| Equip/Vehicles/Furnishings | | | | | | 46,500 | | | | | 46,500 |
| **Total** | | | | | | **46,500** | | | | | **46,500** |

| Funding Sources | 2018 | 2019 | 2020 | 2021 | 2022 | 2023 | 2024 | 2025 | 2026 | 2027 | Total |
|---|---|---|---|---|---|---|---|---|---|---|---|
| Airport Enterprise Operations | | | | | | 46,500 | | | | | 46,500 |
| **Total** | | | | | | **46,500** | | | | | **46,500** |

## Budget Impact/Other

**Project #** NMA-23-002

**Project Name** Nantucket Airport Security

**Department** Airport
**Contact** Tom Rafter
**Type** Equipment
**Useful Life**
**Category** Unassigned
**Priority** n/a

**Fund Type** Enterprise Fund
**Enterprise Fund** Airport
**Location** None

**Total Cost** $500,000

## Description

## Justification

| Expenditures | 2018 | 2019 | 2020 | 2021 | 2022 | 2023 | 2024 | 2025 | 2026 | 2027 | Total |
|---|---|---|---|---|---|---|---|---|---|---|---|
| Other | | | | | | 500,000 | | | | | 500,000 |
| **Total** | | | | | | **500,000** | | | | | **500,000** |

| Funding Sources | 2018 | 2019 | 2020 | 2021 | 2022 | 2023 | 2024 | 2025 | 2026 | 2027 | Total |
|---|---|---|---|---|---|---|---|---|---|---|---|
| Airport Enterprise Operations | | | | | | 500,000 | | | | | 500,000 |
| **Total** | | | | | | **500,000** | | | | | **500,000** |

## Budget Impact/Other

**Project #** NMA-23-003

**Project Name** Taxiway E Rehab

**Department** Airport
**Contact** Tom Rafter
**Type** Improvement
**Useful Life**
**Category** Unassigned
**Priority** n/a

**Fund Type** Enterprise Fund
**Enterprise Fund** Airport
**Location** None

**Total Cost** $2,500,000

## Description

## Justification

| Expenditures | 2018 | 2019 | 2020 | 2021 | 2022 | 2023 | 2024 | 2025 | 2026 | 2027 | Total |
|---|---|---|---|---|---|---|---|---|---|---|---|
| Construction/Maintenance | | | | | | 2,500,000 | | | | | 2,500,000 |
| **Total** | | | | | | **2,500,000** | | | | | **2,500,000** |

| Funding Sources | 2018 | 2019 | 2020 | 2021 | 2022 | 2023 | 2024 | 2025 | 2026 | 2027 | Total |
|---|---|---|---|---|---|---|---|---|---|---|---|
| Airport Enterprise Operations | | | | | | 2,500,000 | | | | | 2,500,000 |
| **Total** | | | | | | **2,500,000** | | | | | **2,500,000** |

## Budget Impact/Other

**Project #** NMA-24-001

**Project Name** Nantucket Operations & ARFF

**Department** Airport
**Contact** Tom Rafter
**Type** Equipment
**Useful Life**
**Category** Vehicles
**Priority** n/a

**Fund Type** Enterprise Fund
**Enterprise Fund** Airport
**Location** None

**Total Cost** $400,000

## Description

## Justification

| Expenditures | 2018 | 2019 | 2020 | 2021 | 2022 | 2023 | 2024 | 2025 | 2026 | 2027 | Total |
|---|---|---|---|---|---|---|---|---|---|---|---|
| Equip/Vehicles/Furnishings | | | | | | | 400,000 | | | | 400,000 |
| **Total** | | | | | | | **400,000** | | | | **400,000** |

| Funding Sources | 2018 | 2019 | 2020 | 2021 | 2022 | 2023 | 2024 | 2025 | 2026 | 2027 | Total |
|---|---|---|---|---|---|---|---|---|---|---|---|
| Airport Enterprise Operations | | | | | | | 400,000 | | | | 400,000 |
| **Total** | | | | | | | **400,000** | | | | **400,000** |

## Budget Impact/Other

**Project #** NMA-24-002

**Project Name** Instrument Approach Upgrades

**Department** Airport
**Contact** Tom Rafter
**Type** Improvement
**Useful Life**
**Category** Unassigned
**Priority** 1 Critical

**Fund Type** Enterprise Fund
**Enterprise Fund** Airport
**Location** None

**Total Cost** $2,000,000

## Description

## Justification

| Expenditures | 2018 | 2019 | 2020 | 2021 | 2022 | 2023 | 2024 | 2025 | 2026 | 2027 | Total |
|---|---|---|---|---|---|---|---|---|---|---|---|
| Construction/Maintenance | | | | | | | 2,000,000 | | | | 2,000,000 |
| **Total** | | | | | | | **2,000,000** | | | | **2,000,000** |

| Funding Sources | 2018 | 2019 | 2020 | 2021 | 2022 | 2023 | 2024 | 2025 | 2026 | 2027 | Total |
|---|---|---|---|---|---|---|---|---|---|---|---|
| Airport Enterprise Operations | | | | | | | 2,000,000 | | | | 2,000,000 |
| **Total** | | | | | | | **2,000,000** | | | | **2,000,000** |

## Budget Impact/Other

**Project #** NMA-25-001

**Project Name** Nantucket Airport Security

**Department** Airport
**Contact** Tom Rafter
**Type** Equipment
**Useful Life**
**Category** Unassigned
**Priority** 1 Critical

**Fund Type** Enterprise Fund
**Enterprise Fund** Airport
**Location** None

**Total Cost** $360,000

## Description

## Justification

| Expenditures | 2018 | 2019 | 2020 | 2021 | 2022 | 2023 | 2024 | 2025 | 2026 | 2027 | Total |
|---|---|---|---|---|---|---|---|---|---|---|---|
| Other | | | | | | | | 360,000 | | | 360,000 |
| **Total** | | | | | | | | **360,000** | | | **360,000** |

| Funding Sources | 2018 | 2019 | 2020 | 2021 | 2022 | 2023 | 2024 | 2025 | 2026 | 2027 | Total |
|---|---|---|---|---|---|---|---|---|---|---|---|
| Airport Enterprise Operations | | | | | | | | 360,000 | | | 360,000 |
| **Total** | | | | | | | | **360,000** | | | **360,000** |

## Budget Impact/Other

**Project #** NMA-25-002

**Project Name** Nanatucket Airport Erosion Control

**Department** Airport
**Contact** Tom Rafter
**Type** Improvement
**Useful Life**
**Category** Unassigned
**Priority** 1 Critical

**Fund Type** Enterprise Fund
**Enterprise Fund** Airport
**Location** None

**Total Cost** $15,000,000

## Description

## Justification

| Expenditures | 2018 | 2019 | 2020 | 2021 | 2022 | 2023 | 2024 | 2025 | 2026 | 2027 | Total |
|---|---|---|---|---|---|---|---|---|---|---|---|
| Construction/Maintenance | | | | | | | | 7,500,000 | 7,500,000 | | 15,000,000 |
| **Total** | | | | | | | | **7,500,000** | **7,500,000** | | **15,000,000** |

| Funding Sources | 2018 | 2019 | 2020 | 2021 | 2022 | 2023 | 2024 | 2025 | 2026 | 2027 | Total |
|---|---|---|---|---|---|---|---|---|---|---|---|
| Airport Enterprise Operations | | | | | | | | 7,500,000 | 7,500,000 | | 15,000,000 |
| **Total** | | | | | | | | **7,500,000** | **7,500,000** | | **15,000,000** |

## Budget Impact/Other

Town of Nantucket, Massachusetts

*Capital Improvement Plan*

2018 thru 2027

# PROJECTS BY DEPARTMENT

| Department | # | Priorit | 2018 | 2019 | 2020 | 2021 | 2022 | 2023 | 2024 | 2025 | 2026 | 2027 | Total |
|---|---|---|---|---|---|---|---|---|---|---|---|---|---|
| **Siasconset** | | | | | | | | | | | | | |
| Water Main Replacement | *SIAS-18-001* | 2 | 2,340,250 | | | | | | | | | | *2,340,250* |
| Pumping Equipment and Controls | *SIAS-19-001* | 2 | | 140,000 | | | | | | | | | *140,000* |
| Water Main Replacement | *SIAS-20-001* | 2 | | | 1,943,355 | | | | | | | | *1,943,355* |
| **Siasconset Total** | | | **2,340,250** | **140,000** | **1,943,355** | | | | | | | | ***4,423,605*** |
| **GRAND TOTAL** | | | **2,340,250** | **140,000** | **1,943,355** | | | | | | | | ***4,423,605*** |

**Fiscal year 2026**

The Washing Pond Standpipe is more exposed to the elements than the North Pasture Tank and the life of a full exterior recoating is expected to be needed between13 – 15 years. The interior coating should last 20 years. Washing Pond was completely recoated inside and out in 2012. The North Pasture Tank was constructed in 2011 and the coating of the steel bowl, with regular maintenance, should last 20 years before a full recoating is needed.

This project includes the all labor, materials and equipment to prepare and recoat the exterior coating, and interior if needed, of the Washing Pond Standpipe as well as repair or rebuild in external structures. The cost estimate includes all engineering and project management costs. The cost estimate for recoating was developed by Haley and Ward Engineers who have been involved in the construction and/or recoating of both tanks.

**Fiscal year Total: $1,100,000 Funding Source: Borrowing**

# Siasconset Water Department

## Component: Water Main Replacement

This capital category addresses the need to replace aging water mains, valves and service lines in the Siasconset water distribution system. While a lot of the system has been replaced there are still major streets that have undersized and hydraulically deficient water mains. The work entails replacement of the water main, valves, service, fire hydrants and restoration. Costs for this type of capital work was developed based on a per linear foot average of the recent Wannacomet water main replacement projects and industry project tracking groups. The price per linear foot (LF) includes materials, labor, equipment, and restoration including asphalt. Cost for 8" water main is calculated at $275.00/LF and water main that is larger than 8" is calculated at $350.00/LF. Project engineering and management cost is calculated at 15% of the construction cost.

**Fiscal Year 2018**

Water mains to be replaced for FY 2018 are as follows: Cost basis is per linear foot (LF)

| | | |
|---|---|---|
| 1. Baxter Road | 6,600 LF @ $275.00/LF | $ 1,815,000 |
| 2. Emily Street | 400 LF @ $275.00/LF | $ 110,000 |
| 3. Butterfly Lane | 400 LF @ $275.00/LF | $ 110,000 |
| Total | | $ 2,035,000 |
| Project Engineering/Management (15% of Construction) | | $ 305,250 |

**Fiscal Year Total: 7,400 LF $2,340,025 Funding Source: Borrowing**

**Fiscal year 2020**

Water mains to be replaced for FY 2020 are as follows:

| | | | |
|---|---|---|---|
| 1. | Morey Lane | 1,830 LF @ $275.00/LF | $ 503,250 |
| 2. | Codfish Park | 2,750 LF @ $275.00/LF | $ 756,250 |
| 3. | Broadway | 850 LF @ $275.00/LF | $ 233,750 |
| 4. | Front Street | 715 LF @ $275.00/LF | $ 196,625 |
| | Total | | $1,689,875 |
| | Project Engineering/Management (15% of Construction Cost) | | $ 253,480 |

**Fiscal Year Total: 6,145 LF $1,943,355 Funding Source: Borrowing**

## Component: Water Meters

This capital program addresses the capital needs of the water meters and related appurtenances including the electronic reading components.

**Fiscal Year 2017**

The expenditure under this program will upgrade the existing vehicle read radio read water meters with the Sensus FlexNet system utilized by Wannacomet Water. After the upgrade is completed the meters will be read from the Wannacomet Office. Additionally, the current meters are halfway through their battery life and the new units will have a 25 year battery life. The customer service advantages of the FlexNet system will allow the staff to provide a higher level of customer service and water accountability of each account. As part of the upgrades the water meter pit covers will be replaced with resin covers that allow the radio waves to pass through uninterrupted. The new covers will have the Sconset Pump embossed on the cover.

Approximately 800 meters will be upgraded at a cost of $350.00 per meter including the new meter cover for a total cost of $280,000. The installation will be done by Wannacomet personnel.

**Fiscal Year Total: $280,000 Funding Source: Retained Earnings**

## Component: Buildings and Grounds

This capital program addresses the capital needs of the Siasconset facilities located on Milestone Road.

**Fiscal year 2017**

Winter Storm Juno pointed out the need for an all weather road to the pump station and the storage tank. This project will pave the road to the pump station and the storage tank and construct a gravel road to the propane tanks. Based on current bids received by Wannacomet Water and the Town of Nantucket for this type of work I estimate the cost to be $100,000.

**Fiscal Year Total: $100,000 Funding Source: Retained Earnings**

## Component: Water Supply, Pumping Equipment and Controls

This capital program addresses the capital needs of the two pumps and related equipment within the single Siasconset Pumping Station stations and their associated controls including the SCADA system.

**Fiscal Year 2017**

The existing submersible pump that was installed in 2008 is starting to show high amperage readings, an indication that it is working too hard. The recent upgrade to the station and controls allows us to use another pump and well during high demand so this can be scheduled for replacement in 2019. The cost is estimated by Ewing Electric Inc. and Haley and Ward Engineers to be $140,000. **This work was completed in FY 2016 as an emergency repair after the controls failed during a storm event and is no longer needed as a capital project.**

**Fiscal year Total: $140,000 Funding Source: Retained Earnings**

## Section II: Anticipated Budgetary Impact of Capital Program

It is the intent of this section to assess the impact on the operating budgets of Wannacomet and Siasconset imposed by the capital program. As a general rule the capital improvements reduce the amount of funds budgeted for repairs and maintenance of the various capital components. However, the biggest impact will be from the increased debt service as the majority of the capital improvements are funded by short and long term borrowing. While a consolidation of the two departments is anticipated it would not be effective until Fiscal Year 2018 at the earliest. Therefore, two budgetary scenarios are being created that will illustrate the impact of the anticipated debt service on a combined enterprise fund and individual operating budgets. It is a given that there will have to be a rate increase for both Wannacomet and Sconset with the magnitude yet to be determined.

### Wannacomet Water Company

**Water Main Replacement:** the impact on the budget should be from the reduction of emergency repairs necessitated by the failure of the aging mains, valves and water services. From 2012 to October 1, 2015 Wannacomet has spent $119,873.63 with outside contractors for emergency repairs. This is an average of $29,968.00 per year which I think is a reasonable number to use as a budgetary savings. This amount does not include overtime labor for Wannacomet Staff or materials provided from Wannacomet inventory.

**Water System Expansion:** This component will result in minimal budgetary impact as all of the materials are new and the increased maintenance is minimal. Checking the valves and hydrants twice a year will entail one day's labor.

**Buildings and Grounds:** The work being proposed in this component should reduce energy costs by an estimated 15% with the new windows. However, because the heating costs are paid by the General Manager as a condition of his housing the budget impact is negligible.

**Pumping Equipment and Controls:** There will be no impact on the budget by the replacement of the components at the David D. Worth Pump Station. However, the reduction of the risk of failure and thus emergency expenses is greatly reduced.

**Hydrant Replacement:** The impact on the budget by the implementation of this program is reduced repairs which will allow for level funding of the Hydrant Maintenance account. Additionally, the new hydrants are manufactured with materials, i.e. stainless steel and epoxy coatings that reduce wear and tear and extend the hydrant life.

**Water Storage Tanks:** The maintenance of a water storage tank is minimal until such time as it needs a complete recoating. Owner maintenance consists of annual inspections, mandatory by MassDEP, regardless of the age or condition of the tank and minimal power washing. So maintenance to the tanks is budgeted at less than $500.00 per year and it will be the same after recoating. The inspections are carried out by a professional engineer and are carried under professional services and the mowing around the tanks is carried under building and grounds maintenance.

## Siasconset Water Department

**Water Main Replacement:** The budgetary impact is similar to Wannacomet. From 2012 to October 1, 2015 Siasconset has spent $20,370.00 with outside contractors for emergency repairs. This is an average of $5,092.50 per year which I think is a reasonable number to use as a budgetary savings. This amount does not include overtime labor for Wannacomet Staff or materials provided from Wannacomet inventory. The increased hydraulic characteristics of the new mains should reduce the amount of energy used to force water through the main.

**Water Meter Upgrade:** The main benefit of this upgrade is the increased level of customer service and real time monitoring of the system. However, doing the upgrade now will mean that in 10 years $120,000 will not have to be spent to keep the existing system running.

**Building and Grounds:** doing the work in this component will save approximately $1,000 per year that is now spent to maintain the dirt roads.

**Pumping Equipment and Controls:** Once again, there are not going to be appreciable budget savings or increases. This work is necessitated by the need to have reliable backup pumping equipment for Siasconset.

**Project #** SIAS-18-001

**Project Name** Water Main Replacement

**Department** Siasconset
**Contact** Bob Gardner
**Type** Maintenance
**Useful Life**
**Category** Water
**Priority** 2 Very Important

**Fund Type** Enterprise Fund
**Enterprise Fund** Siasconset
**Location** None

**Total Cost** $2,340,250

## Description

Replacement of Water mains on the following streets:

1) Baxter Rd 6,600 LF 2) Emily St 400LF
2) Butterfly Lane 400 LF

Total project costs includes 15% for Engineering/Management. The project costs are calculated @ 275/LF for 8" main, and 350/LF for a main larger than 8"

## Justification

This proposed capital program will address the needs of an aging water system. The program will replace aging mains, valves and service lines in the Wannacomet distiribution system. The entire program is expected to take place over a 10 year time frame.

| Expenditures | 2018 | 2019 | 2020 | 2021 | 2022 | 2023 | 2024 | 2025 | 2026 | 2027 | Total |
|---|---|---|---|---|---|---|---|---|---|---|---|
| Planning/Design | 305,250 | | | | | | | | | | 305,250 |
| Construction/Maintenance | 2,035,000 | | | | | | | | | | 2,035,000 |
| **Total** | **2,340,250** | | | | | | | | | | **2,340,250** |

| Funding Sources | 2018 | 2019 | 2020 | 2021 | 2022 | 2023 | 2024 | 2025 | 2026 | 2027 | Total |
|---|---|---|---|---|---|---|---|---|---|---|---|
| Water Fund | 2,340,025 | | | | | | | | | | 2,340,025 |
| **Total** | **2,340,025** | | | | | | | | | | **2,340,025** |

## Budget Impact/Other

**Project #** SIAS-19-001

**Project Name** Pumping Equipment and Controls

**Department** Siasconset
**Contact** Bob Gardner
**Type** Maintenance
**Useful Life**
**Category** Water
**Priority** 2 Very Important

**Fund Type** Enterprise Fund
**Enterprise Fund** Siasconset
**Location** None

**Total Cost** $140,000

## Description

This capital program addresses the capital needs of the two pumps and related equipment within the single Siasconset Pumping Station stations and their associated controls, including the SCADA system.

The cost has been estimated by Ewing Electric, Inc,. And Haley and Ward Engineers

## Justification

The existing submersible pump that was installed in 2008 is starting to show high amperage readings, which is an indication that it is working to hard. The recent upgrade to the station allows us to use another pump and well during periods of high demand, so this can be scheduled for replacement in 2019.

| Expenditures | 2018 | 2019 | 2020 | 2021 | 2022 | 2023 | 2024 | 2025 | 2026 | 2027 | Total |
|---|---|---|---|---|---|---|---|---|---|---|---|
| Construction/Maintenance | | 140,000 | | | | | | | | | 140,000 |
| **Total** | | **140,000** | | | | | | | | | **140,000** |

| Funding Sources | 2018 | 2019 | 2020 | 2021 | 2022 | 2023 | 2024 | 2025 | 2026 | 2027 | Total |
|---|---|---|---|---|---|---|---|---|---|---|---|
| Water Fund | | 140,000 | | | | | | | | | 140,000 |
| **Total** | | **140,000** | | | | | | | | | **140,000** |

## Budget Impact/Other

**Project #** SIAS-20-001

**Project Name** Water Main Replacement

**Department** Siasconset
**Contact** Bob Gardner
**Type** Maintenance
**Useful Life**
**Category** Water
**Priority** 2 Very Important

**Fund Type** Enterprise Fund
**Enterprise Fund** Siasconset
**Location** None

**Total Cost** $1,943,355

## Description

Replacement of Water mains on the following streets:

1) Morey Lane 1,830 LF 2) Codfish Park 2,750 LF
3) Broadway 850 LF 4) Front St 715 LF

Total project costs includes 15% for Engineering/Management. The project costs are calculated @ 270/LF for 8" main, and 350/LF for a main larger than 8"

## Justification

This proposed capital program will address the needs of an aging water system. The program will replace aging mains, valves and service lines in the Wannacomet distiribution system. The entire program is expected to take place over a 10 year time frame.

| Expenditures | 2018 | 2019 | 2020 | 2021 | 2022 | 2023 | 2024 | 2025 | 2026 | 2027 | Total |
|---|---|---|---|---|---|---|---|---|---|---|---|
| Planning/Design | | | 253,480 | | | | | | | | 253,480 |
| Construction/Maintenance | | | 1,689,875 | | | | | | | | 1,689,875 |
| **Total** | | | **1,943,355** | | | | | | | | **1,943,355** |

| Funding Sources | 2018 | 2019 | 2020 | 2021 | 2022 | 2023 | 2024 | 2025 | 2026 | 2027 | Total |
|---|---|---|---|---|---|---|---|---|---|---|---|
| Water Fund | | | 1,766,688 | | | | | | | | 1,766,688 |
| **Total** | | | **1,766,688** | | | | | | | | **1,766,688** |

## Budget Impact/Other

Town of Nantucket, Massachusetts

*Capital Improvement Plan*

2018 thru 2027

# PROJECTS BY DEPARTMENT

| Department | # | Priorit | 2018 | 2019 | 2020 | 2021 | 2022 | 2023 | 2024 | 2025 | 2026 | 2027 | Total |
|---|---|---|---|---|---|---|---|---|---|---|---|---|---|
| **Wannacomet** | | | | | | | | | | | | | |
| Hydrant Replacement | *WANN-17-005* | 2 | 175,000 | | | | | | | | | | *175,000* |
| Water Main Replacement | *WANN-18-001* | 2 | 2,420,635 | | | | | | | | | | *2,420,635* |
| Water Main Replacement | *WANN-19-001* | 2 | | 2,238,475 | | | | | | | | | *2,238,475* |
| Water Main Replacement | *WANN-20-001* | 2 | | | 2,587,500 | | | | | | | | *2,587,500* |
| Water main replacement | *WANN-21-001* | 2 | | | | 1,104,000 | | | | | | | *1,104,000* |
| Water Main Replacement | *WANN-22-000 1* | 2 | | | | | 3,211,663 | | | | | | *3,211,663* |
| Water Storage Tanks | *WANN-26-001* | 2 | | | | | | | | | 1,100,000 | | *1,100,000* |
| **Wannacomet Total** | | | **2,595,635** | **2,238,475** | **2,587,500** | **1,104,000** | **3,211,663** | | | | **1,100,000** | | ***12,837,273*** |
| **GRAND TOTAL** | | | **2,595,635** | **2,238,475** | **2,587,500** | **1,104,000** | **3,211,663** | | | | **1,100,000** | | ***12,837,273*** |

**Wannacomet Water Company**
**Siasconset Water Department**
**Consolidated Capital Program FY 2017 – 2026**
**With Latest Revisions**
**September 13, 2016**

## Introduction

The Nantucket Water Commission and the Siasconset Water Commission directed the General Manager and his staff to develop a consolidated capital improvement program for their review and adoption. The intent being that should a proposed merger of the two departments into a single enterprise fund take place the capital needs and their impact on a single budget can be assessed. However, the earliest that such a merger would take effect would likely be Fiscal Year 2018. Therefore, this program is presented in such a way that the capital needs of Wannacomet and Siasconset can be assessed for the impact on their respective budgets as well as a consolidated budget.

The program has two sections. The first is the identification and definition of the various infrastructure components that are included in the program and the specific fiscal year improvement schedule and cost projections for each of these components over a 10 year time frame. The second section addresses the budgetary impact of these improvements.

## Revisions

The Capital Plan was reviewed by Wannacomet staff in and changes were made in several areas to reflect several projects by other departments or agencies, deficits in the system identified since the plan was originally adopted and recent regulatory requirements. The revised plan was finalized on September 13, 2016 and is a follows.

## SECTION I: Plan Components

The purpose of this section is the identification of the various components of the capital improvement program and to define the criteria used for the development of the fiscal year specific improvement schedule. The components are as follows:

- Water Main and Lead Water Service Line Replacement
- System Expansion
- Building and Grounds
- Pumping Equipment and Controls
- Fire Hydrant Upgrade and Modernization
- Water Storage Tanks

# Wannacomet Water Company

## Component: Water Main and Water Service Line Replacement

This capital category addresses the need to replace aging water mains, valves and service lines in the Wannacomet distribution system. The entire program is expected to take place over 10 years and the goal is to replace every water main that was installed according to all or some of the following criteria. However, the order of the replacements can change to take advantage of other work being done to reduce costs and limit the inconvenience to the neighborhood.

1. Unlined water mains that regardless of size were installed prior to 1960

2. Water mains that regardless of date of installation have a record of leaks or poor hydraulic performance

3. Water mains that are smaller than 6" and were installed between 1900 and 1950

4. A recognized need for improvement driven by an outside agency that has an impact on the timeline. For example, the construction of the new Nantucket Cottage Hospital creates a demand for more flow and thus the work on Prospect Street and adjacent streets was moved from Fiscal year 2018 to Fiscal Year 2017. The original Fiscal Year 2017 group was rescheduled for Fiscal year 2018.

5. Lead Service Lines to comply with recent regulatory requirements

Costs for this type of capital work was developed based on a per linear foot average of recent Wannacomet water main replacement projects and industry project tracking groups. Costs have been increased by $25.00 per foot for each size group of pipe. The price per linear foot (LF) includes materials, labor, equipment, and restoration including asphalt. Cost for 8" water main is calculated at $275.00/LF and water main that is larger than 8" is calculated at $350.00/LF. Project engineering and management cost is calculated at 15% of the construction cost. Construction of any size pipe in dirt roads or streets remains @ $140.00 per linear foot.

**Fiscal Year 2017** ($1,546,050 approved at 2016 ATM, work will be adjusted based on bids to stay within the appropriation)

Water Mains to be replaced in FY 2017 are as follows

| | | | |
|---|---|---|---|
| 1. | Prospect Street | 2,700 LF @ $350.00/LF | $ 945,000 |
| 2. | Joy Street | 570 LF @ $275.00/LF | $ 156,750 |
| 3. | Mount Vernon | 650 LF @ $275.00/LF | $ 178,750 |
| 4. | Atlantic/Surfside | 1,120 LF @ $350.00/LF | $ 392,000 |
| | Total | | $1,672,500 |
| | Project engineering/Management (15% of construction) | | $ 250,875 |
| | Lead Services Removed: 8 | | |

**Fiscal Year Total: 5,040 LF $1,923,375 Funding Source: Borrowing**

**Fiscal Year 2018**

Water mains to be replaced in FY 2018 are as follows

| | | | |
|---|---|---|---|
| 1. | North Liberty Street | 3,240 LF @ $275.00/LF | $ 891,000 |
| 2. | Lily Street | 1,180 LF @ $275.00/ LF | $ 324,500 |
| 3. | Brush Road | 460 LF @ $140.00/ LF | $ 64,400 |
| 4. | Derrymore | 700 LF @ $275.00/LF | $ 192,500 |
| 5. | Nantucket Avenue | 300 LF @ $275.00/LF | $ 82,500 |
| 6. | Lincoln Circle | 1,000 LF @ $275.00/LF | $ 275,000 |
| 7. | Grant/Cabot Avenues | 1,000 LF @ $275.00/LF | $ 275,000 |
| | Total | | $2,104,900 |
| | Project Engineering/Management (15% of construction) | | $ 315,735 |
| | Lead Services Removed: 27 | | |

**Fiscal Year Totals: 7880 LF $2,420,635 Funding Source: Borrowing**

**Fiscal year 2019**

Water Mains to be replaced in FY 2019 are as follows

| | | | |
|---|---|---|---|
| 1. | Silver Street | 750 LF @ $275.00/LF | $ 206,250 |
| 2. | Eagle Lane | 400 LF @ $275.00/LF | $ 110,000 |
| 3. | Orange Street | 1,970 Lf @ $350.00/LF | $ 689,500 |
| 4. | New Street | 715 LF @ $275.00/LF | $ 196,625 |
| 5. | Back Street | 700 LF @ $275.00/LF | $ 192,500 |
| 6. | Pleasant Street (New) | 725 LF @ $275.00/LF | $ 199,375 |
| 7. | Farmer | 425 LF @ $275.00/LF | $ 116,875 |
| 8. | Flora | 350 LF @ $275.00/LF | $ 96,250 |
| 9. | Mulberry | 400 LF @ $275.00/LF | $ 110,000 |
| 10. | Coon | 400 LF @ $275.00/LF | $ 110,000 |
| 11. | Beaver | 450 LF @ $275.00/LF | $ 123,750 |
| 12. | Spring | 450 LF @ $275.00/LF | $ 123,750 |
| 13. | Dave | 575 LF @ $275.00/LF | $ 158,125 |
| 14. | Meader | 400 LF @ $275.00/LF | $ 110,000 |
| 15. | Cherry Street | 750 LF @ $275.00/LF | $ 206,250 |
| 16. | York (Union to Pleasant) | 1,175 LF @ $275.00/LF | $ 323,125 |
| | Total | | $3,072,375 |
| | Project Engineering/Management (15% of Construction) | | $ 460,856 |
| | Lead Services Removed: 33 | | |

**Fiscal year Total: 10,635 LF $3,533,231 Funding Source: Borrowing**

**Fiscal Year 2020**

Water Mains to be replaced in FY 2020 are as follows

| | | | |
|---|---|---|---|
| 1. | Sherburne Tpk. | 930 LF @ $275.00/LF | $ 255,750 |
| 2. | Sachem | 120 LF @ $275.00/LF | $ 33,000 |
| 3. | Gosnold | 400 LF @ $275.00/LF | $ 110,000 |
| 4. | Hallowell | 600 LF @ $275.00/LF | $ 165,000 |
| 5. | Hulbert Avenue | 3,000 LF @ $275.00/LF | $ 825,000 |
| 6. | Beach Street | 300 LF @ $275.00/LF | $ 112,500 |
| 7. | Hinckley Lane | 1,100 LF @ $275.00/LF | $ 302,500 |
| 8. | North Star | 250 LF @ $275.00/LF | $ 68,750 |
| | Total | | $1,872,500 |
| | Project Engineering/Management (15% of Construction) | | $ 280,875 |
| | Lead Services Removed: 2 | | |

**Fiscal Year Total: 6,700 LF $2,153,375 Funding Source: Borrowing**

**Fiscal year 2021**

Water Mains to be replaced in 2021 are as follows

| | | | |
|---|---|---|---|
| 1. | Washington Street | 1,500 LF @ $350.00/ LF | $ 525,000 |
| 2. | Washington Street Ext. | 965 LF @ $275.00/LF | $ 265,375 |
| 3. | South Water Street | 925 LF @ $275.00/LF | $ 254,375 |
| 4. | Main Street Abandonment of 6" | Lump Sum | $ 150,000 |
| | Total | | $1,194,750 |
| | Project Engineering/Management (15% of Construction) | | $ 179,212 |
| | Lead Services Removed: 3 | | |

**Fiscal Year Total: 3,390 LF $1,373,962 Funding Source: Borrowing**

**Fiscal year 2022**

Water Mains to be replaced in FY 2022 are as follows

| | | | |
|---|---|---|---|
| 1. | Gardner Street | 630 LF @ $275.00/ LF | $ 173,250 |
| 2. | India Street | 1,180 LF @ $275.00/LF | $ 324,500 |
| 3. | Hussey Street | 400 LF @$275.00/LF | $ 110,000 |
| 4. | Traders Lane | 350 LF @ $275.00/LF | $ 96,250 |
| 5. | Vestal Street | 975 LF @ $275.00/LF | $ 268,125 |
| 6. | Bloom Street | 280 LF @ $275.00/LF | $ 77,000 |
| 7. | Milk Street | 700 LF @ $275.00/LF | $ 192,500 |
| 8. | Quaker | 1,000 LF @ $275.00/LF | $ 275,000 |
| 9. | Copper Lane | 600 LF @ $275.00/LF | $ 165,000 |
| 10. | Main/Caton Circle | 450 LF @ $275.00/LF | $ 123,750 |
| 11. | New Dollar Lane | 450 LF @ $275.00/LF | $ 123,750 |
| 12. | Candle House Lane | 670 LF @ $275.00/LF | $ 184,250 |
| | Total | | $2,113,375 |

| | |
|---|---|
| Project Engineering/Management (15% of construction) | $ 317,006 |
| Lead Services Removed: 24 | |

**Fiscal Year Total: 7,685 LF $2,430,381 Funding Source: Borrowing**

**Fiscal Year 2023**

| | |
|---|---|
| Removal of remaining 30 lead service lines at $6,000/service | $180,000 |
| Engineering performed in-house | |
| **Fiscal Year Total** | **$180,000** |

## Component: Water System Expansion

This capital program addresses the expansion of the Distribution system in response to a substantial request for service. There are no substantial expansions of the system planned after the final extension in Madaket.

**Fiscal Year 2017**

Currently, there is such a request coming from the residents of South Cambridge, Midland Avenue, and Arkansas Avenue in the Madaket area. The funding for this type of project is fronted by the Water Commission and then the connection fee is set to recoup approximately 80% of the project cost. The preliminary project cost is $825,000 and includes all engineering, labor, materials and equipment to install approximately 5,600 linear feet of 8" water main at $125.00 per linear foot.

**Fiscal Year Total: $825,000 Funding Source: Borrowing**

## Component: Buildings and Grounds

There is no capital projects in this component planned before 2027.

## Component: Water Supply, Pumping Equipment and Controls

**Fiscal Year 2017**

This capital program addresses the capital needs of the 4 pumping stations and their associated controls, wells and pumps. The David D. Worth pumping station motor control center and variable frequency drive units are the original units, with minor upgrades and repairs, installed in 1997. The expected life of these units is 20 years. This pumping station is the main pumping well in the Wannacomet system and we are planning on replacing these units before they fail. The cost estimate of $120,000 was developed by Ewing Electric Inc. and includes all labor, materials and equipment to replace these units.

**Fiscal Year Total: $120,000 Funding Source: Retained Earnings**

**Fiscal Year 2024**

Well Number 12 has been in service since 1983 and in Fiscal year 2024 we are planning on redeveloping or replacing the well at an estimated cost to include permitting and engineering associated with the project. Cost Estimate based upon estimates developed by consulting engineers and professional well installers.

**Fiscal Year Total: $600,000 Funding Source: Borrowing/ Retained Earnings**

## Component: Fire Hydrant Upgrade and Modernization

This program is designed to replace all fire hydrants over 20 years old. Hydrants over 20 years old are difficult to get parts for and it is more cost effective to replace them. Not to mention the increased reliability.

**Fiscal Year 2016: Phase 1**

This phase will replace 60 hydrants all of which are over 40 years old. The estimated cost is based on recent hydrant replacements and is expected to cost an average of $4,500 per hydrant for a Phase 1 cost of $270,000.

**Fiscal Year Total: $270,000 Funding Source: Current Borrowing**

**Fiscal year 2017: Phase 2**

This Phase will replace approximately 40 hydrants between 30 and 40 years old at a cost of $4,500 per hydrant.

**Fiscal Year Total: $180,000 Funding Source: Retained Earnings**

**Fiscal Year 2019: Phase 3**

This phase will replace approximately 35 hydrants between 20 and 30 years old at a cost of $5,000 per hydrant.

**Fiscal Year Total: $175,000 Funding Source: Retained Earnings**

## Component: Water Storage Tanks

This program is designed to recognize exterior and interior recoating and replacement or reconstruction of the attached appurtenances to the Washing Pond Standpipe, and the steel bowl, including attached appurtenances, and concrete column of the North Pasture Composite Elevated Tank.

**Fiscal year 2026**

The Washing Pond Standpipe is more exposed to the elements than the North Pasture Tank and the life of a full exterior recoating is expected to be needed between13 – 15 years. The interior coating should last 20 years. Washing Pond was completely recoated inside and out in 2012. The North Pasture Tank was constructed in 2011 and the coating of the steel bowl, with regular maintenance, should last 20 years before a full recoating is needed.

This project includes the all labor, materials and equipment to prepare and recoat the exterior coating, and interior if needed, of the Washing Pond Standpipe as well as repair or rebuild in external structures. The cost estimate includes all engineering and project management costs. The cost estimate for recoating was developed by Haley and Ward Engineers who have been involved in the construction and/or recoating of both tanks.

**Fiscal year Total: $1,100,000 Funding Source: Borrowing**

# Siasconset Water Department

## Component: Water Main Replacement

This capital category addresses the need to replace aging water mains, valves and service lines in the Siasconset water distribution system. While a lot of the system has been replaced there are still major streets that have undersized and hydraulically deficient water mains. The work entails replacement of the water main, valves, service, fire hydrants and restoration. Costs for this type of capital work was developed based on a per linear foot average of the recent Wannacomet water main replacement projects and industry project tracking groups. The price per linear foot (LF) includes materials, labor, equipment, and restoration including asphalt. Cost for 8" water main is calculated at $275.00/LF and water main that is larger than 8" is calculated at $350.00/LF. Project engineering and management cost is calculated at 15% of the construction cost.

**Fiscal Year 2018**

Water mains to be replaced for FY 2018 are as follows: Cost basis is per linear foot (LF)

| | | |
|---|---|---|
| 1. Baxter Road | 6,600 LF @ $275.00/LF | $ 1,815,000 |
| 2. Emily Street | 400 LF @ $275.00/LF | $ 110,000 |
| 3. Butterfly Lane | 400 LF @ $275.00/LF | $ 110,000 |
| Total | | $ 2,035,000 |
| Project Engineering/Management (15% of Construction) | | $ 305,250 |

**Fiscal Year Total: 7,400 LF $2,340,025 Funding Source: Borrowing**

**Project #** WANN-17-005

**Project Name** Hydrant Replacement

**Department** Wannacomet
**Contact** Bob Gardner
**Type** Maintenance
**Useful Life**
**Category** Water
**Priority** 2 Very Important

**Fund Type** Enterprise Fund
**Enterprise Fund** Wannacomet
**Location** None

**Total Cost** $625,000

## Description

Replacement of hydrants located thorugh out the water distribution system. This is a 3 year project, with the first funding in FY2016

## Justification

This project will be replacing the hydrants in the water distribution system. The first phase which is underway, replaces approxiumately 60 hydrants which are over 40 years old. The 2nd phase will replace approximately 40 hydrants, which are between 30 - 40 years old. The last phase will replace approximately 35 hydrants, who range in age from 20 - 30 years old.

| Prior | Expenditures | 2018 | 2019 | 2020 | 2021 | 2022 | 2023 | 2024 | 2025 | 2026 | 2027 | Total |
|---|---|---|---|---|---|---|---|---|---|---|---|---|
| 450,000 | Construction/Maintenance | 175,000 | | | | | | | | | | 175,000 |
| Total | Total | 175,000 | | | | | | | | | | 175,000 |

| Prior | Funding Sources | 2018 | 2019 | 2020 | 2021 | 2022 | 2023 | 2024 | 2025 | 2026 | 2027 | Total |
|---|---|---|---|---|---|---|---|---|---|---|---|---|
| 450,000 | Water Fund | 175,000 | | | | | | | | | | 175,000 |
| Total | Total | 175,000 | | | | | | | | | | 175,000 |

## Budget Impact/Other

**Project #** WANN-18-001

**Project Name** Water Main Replacement

**Department** Wannacomet
**Contact** Bob Gardner
**Type** Maintenance
**Useful Life**
**Category** Water
**Priority** 2 Very Important

**Fund Type** Enterprise Fund
**Enterprise Fund** Wannacomet
**Location** None

**Total Cost** $2,420,635

## Description

Water Main Replacement. Continued replacement of the aging mains, valves and service lines. The following areas will be done during this project.

| | | | |
|---|---|---|---|
| 1) Prospect Street | 2,700 LF | 2) Joy Street | 570 LF |
| 3) Mount Vernon | 650 LF | 4) West York Lane | 875 LF |

Total project costs includes 15% for Engineering/Management. The project costs are calculated @ 250/LF for 8" main, and 325/LF for a main larger than 8"

## Justification

This proposed capital program will address the needs of an aging water system. The program will replace aging mains, valves and service lines in the Wannacomet distiribution system. The entire program is expected to take place over a 10 year time frame.

| Expenditures | 2018 | 2019 | 2020 | 2021 | 2022 | 2023 | 2024 | 2025 | 2026 | 2027 | Total |
|---|---|---|---|---|---|---|---|---|---|---|---|
| Planning/Design | 287,813 | | | | | | | | | | 287,813 |
| Construction/Maintenance | 2,132,822 | | | | | | | | | | 2,132,822 |
| **Total** | **2,420,635** | | | | | | | | | | **2,420,635** |

| Funding Sources | 2018 | 2019 | 2020 | 2021 | 2022 | 2023 | 2024 | 2025 | 2026 | 2027 | Total |
|---|---|---|---|---|---|---|---|---|---|---|---|
| Water Fund | 2,420,635 | | | | | | | | | | 2,420,635 |
| **Total** | **2,420,635** | | | | | | | | | | **2,420,635** |

## Budget Impact/Other

**Project #** WANN-19-001

**Project Name** Water Main Replacement

**Department** Wannacomet
**Contact**
**Type** Maintenance
**Useful Life**
**Category** Unassigned
**Priority** 2 Very Important

**Fund Type** Enterprise Fund
**Enterprise Fund** Wannacomet
**Location** None

**Total Cost** $2,238,475

## Description

Replacement of aging mains, valves and service connections. The following streets will be done during this phase of the project,

| | | | |
|---|---|---|---|
| 1) Gardner Street | 630 LF | 2) India Street | 1,180 LF |
| 3) Hussey Street | 400 LF | 4) Traders Lane | 350 LF |
| 5) Vestal Street | 975 LF | 6) Bloom Street | 280 LF |
| 7) Milk Street | 700 LF | 8) Quaker Street | 1,000 LF |
| 9) Copper Lane | 600 LF | 10) Main/Caton Circle | 450 LF |
| 11) New Dollar Lane | 450 LF | 12) Candle House Lane | 670 LF |

Total project costs includes 15% for Engineering/Management. The project costs are calculated @ 250/LF for 8" main, and 325/LF for a main larger than 8"

## Justification

This proposed capital program will address the needs of an aging water system. The program will replace aging mains, valves and service lines in the Wannacomet distiribution system. The entire program is expected to take place over a 10 year time frame.

| Expenditures | 2018 | 2019 | 2020 | 2021 | 2022 | 2023 | 2024 | 2025 | 2026 | 2027 | Total |
|---|---|---|---|---|---|---|---|---|---|---|---|
| Planning/Design | | 291,975 | | | | | | | | | 291,975 |
| Construction/Maintenance | | 1,946,500 | | | | | | | | | 1,946,500 |
| **Total** | | **2,238,475** | | | | | | | | | **2,238,475** |

| Funding Sources | 2018 | 2019 | 2020 | 2021 | 2022 | 2023 | 2024 | 2025 | 2026 | 2027 | Total |
|---|---|---|---|---|---|---|---|---|---|---|---|
| Water Fund | | 2,238,475 | | | | | | | | | 2,238,475 |
| **Total** | | **2,238,475** | | | | | | | | | **2,238,475** |

## Budget Impact/Other

**Project #** WANN-20-001

**Project Name** Water Main Replacement

**Department** Wannacomet
**Contact** Bob Gardner
**Type** Maintenance
**Useful Life**
**Category** Water
**Priority** 2 Very Important

**Fund Type** Enterprise Fund
**Enterprise Fund** Wannacomet
**Location** None

**Total Cost** $2,587,500

## Description

Replacement of Water mains on the following streets:

| | | | |
|---|---|---|---|
| 1) Lincoln Circle | 1,000 LF | 2) Nantucket Ave | 300 LF |
| 3) Grant Ave | 1,000 LF | 4) Sherburne Ave/Way | 930 LF |
| 5) Sachem | 120 LF | 6) Gosnold | 400 LF |
| 7) Hallowell | 600 LF | 8) Hulbert Ave | 3,000 LF |
| 9) Beach St | 300 LF | 10) Hinckley Ln | 1,100 LF |
| 11)North Star | 250 LF | | |

Total project costs includes 15% for Engineering/Management. The project costs are calculated @ 250/LF for 8" main, and 325/LF for a main larger than 8"

Project costs include Engineering/Management Which is calculated at 15% of construction costs.

## Justification

This proposed capital program will address the needs of an aging water system. The program will replace aging mains, valves and service lines in the Wannacomet distiribution system. The entire program is expected to take place over a 10 year time frame.

| Expenditures | 2018 | 2019 | 2020 | 2021 | 2022 | 2023 | 2024 | 2025 | 2026 | 2027 | Total |
|---|---|---|---|---|---|---|---|---|---|---|---|
| Planning/Design | | | 337,500 | | | | | | | | 337,500 |
| Construction/Maintenance | | | 2,250,000 | | | | | | | | 2,250,000 |
| **Total** | | | **2,587,500** | | | | | | | | **2,587,500** |

| Funding Sources | 2018 | 2019 | 2020 | 2021 | 2022 | 2023 | 2024 | 2025 | 2026 | 2027 | Total |
|---|---|---|---|---|---|---|---|---|---|---|---|
| Water Fund | | | 2,587,500 | | | | | | | | 2,587,500 |
| **Total** | | | **2,587,500** | | | | | | | | **2,587,500** |

## Budget Impact/Other

**Project #** WANN-21-001

**Project Name** Water main replacement

**Department** Wannacomet
**Contact** Bob Gardner
**Type** Maintenance
**Useful Life**
**Category** Water
**Priority** 2 Very Important

**Fund Type** Enterprise Fund
**Enterprise Fund** Wannacomet
**Location** None

**Total Cost** $1,104,000

## Description

Replacement of the water system mains, valves and service lines. The mains, valves and service lines will be replaced on the following streets:

1) Washington St 1,500 LF
2) Washington St Ext 965 LF
3) South Water St 325 LF
3) Main St Abondonment

Total project costs includes 15% for Engineering/Management. The project costs are calculated @ 250/LF for 8" main, and 325/LF for a main larger than 8"

## Justification

This proposed capital program will address the needs of an aging water system. The program will replace aging mains, valves and service lines in the Wannacomet distiribution system. The entire program is expected to take place over a 10 year time frame.

| Expenditures | 2018 | 2019 | 2020 | 2021 | 2022 | 2023 | 2024 | 2025 | 2026 | 2027 | Total |
|---|---|---|---|---|---|---|---|---|---|---|---|
| Planning/Design | | | | 144,000 | | | | | | | 144,000 |
| Construction/Maintenance | | | | 960,000 | | | | | | | 960,000 |
| **Total** | | | | **1,104,000** | | | | | | | **1,104,000** |

| Funding Sources | 2018 | 2019 | 2020 | 2021 | 2022 | 2023 | 2024 | 2025 | 2026 | 2027 | Total |
|---|---|---|---|---|---|---|---|---|---|---|---|
| Water Fund | | | | 1,104,000 | | | | | | | 1,104,000 |
| **Total** | | | | **1,104,000** | | | | | | | **1,104,000** |

## Budget Impact/Other

**Project #** WANN-22-0001

**Project Name** Water Main Replacement

**Department** Wannacomet
**Contact** Bob Gardner
**Type** Maintenance
**Useful Life**
**Category** Water
**Priority** 2 Very Important

**Fund Type** Enterprise Fund
**Enterprise Fund** Wannacomet
**Location** None

**Total Cost** $3,211,663

## Description

Replacement of water mains, valves, and service lines on the following streets:

| | | | |
|---|---|---|---|
| 1) Silver St | 750 LF | 2) Eagle Lane | 400 LF |
| 3) Orange St | 1,970 LF | 4) Stone Alley | 200 LF |
| 5) Spring St | 450 LF | 6) New St | 715 LF |
| 7) Gorham St | 100 LF | 8) Surfside/Atlantic | 1,120 LF |
| 9) Back St | 700 LF | 10) Pleasant St (NEW) | 725 LF |
| 11) Farmer | 425 LF | 12) Flora | 350 LF |
| 13) Mulberry | 400 LF | 14) Coon | 400 LF |
| 15) Beaver | 450 LF | 16) Spring | 450 LF |
| 17) Dave | 575 LF | 18) Meader | 400 LF |

Total project costs includes 15% for Engineering/Management. The project costs are calculated @ 250/LF for 8" main, and 325/LF for a main larger than 8"

## Justification

This proposed capital program will address the needs of an aging water system. The program will replace aging mains, valves and service lines in the Wannacomet distiribution system. The entire program is expected to take place over a 10 year time frame.

| Expenditures | 2018 | 2019 | 2020 | 2021 | 2022 | 2023 | 2024 | 2025 | 2026 | 2027 | Total |
|---|---|---|---|---|---|---|---|---|---|---|---|
| Planning/Design | | | | | 418,913 | | | | | | 418,913 |
| Construction/Maintenance | | | | | 2,792,750 | | | | | | 2,792,750 |
| **Total** | | | | | **3,211,663** | | | | | | **3,211,663** |

| Funding Sources | 2018 | 2019 | 2020 | 2021 | 2022 | 2023 | 2024 | 2025 | 2026 | 2027 | Total |
|---|---|---|---|---|---|---|---|---|---|---|---|
| Water Fund | | | | | 3,211,663 | | | | | | 3,211,663 |
| **Total** | | | | | **3,211,663** | | | | | | **3,211,663** |

## Budget Impact/Other

**Project #** WANN-26-001

**Project Name** Water Storage Tanks

**Department** Wannacomet
**Contact** Bob Gardner
**Type** Maintenance
**Useful Life**
**Category** Water
**Priority** 2 Very Important

**Fund Type** Enterprise Fund
**Enterprise Fund** Wannacomet
**Location** None

**Total Cost** $1,100,000

## Description

This Capital Program is designed to recognize exterior and interior recoating and replacement or reconstruction of the attahed appurtenances to the Washing Pond Standpipe and steel bowl. This includes the attached appurtenances, and concrete column of the North Pasture Composite Elevated Tank.

## Justification

The Washing Pond Standpipe is more exposed to the elements than the North Pasture Tank and the life of a full exterior coating is expected last between 13 - 15 years. The interior coating should last 20 years. Washing Pond was completely recoated inside and out in 2012. The North Pasture Tank was reconstucted in 2011 and the coating of the steel bowl, with regular maintenance, should last 20 years before a full recoating is necessary.

The Washing Pond Project includes all labor, materials, and equipment to prepare and recoat the exterior coating, and interior if needed, of the Washing Pond Standpipe as well as repair or rebuildthe external structures. The cost estimate includes all engineering and project management costs.

| Expenditures | 2018 | 2019 | 2020 | 2021 | 2022 | 2023 | 2024 | 2025 | 2026 | 2027 | Total |
|---|---|---|---|---|---|---|---|---|---|---|---|
| Construction/Maintenance | | | | | | | | | 1,100,000 | | 1,100,000 |
| **Total** | | | | | | | | | **1,100,000** | | **1,100,000** |

| Funding Sources | 2018 | 2019 | 2020 | 2021 | 2022 | 2023 | 2024 | 2025 | 2026 | 2027 | Total |
|---|---|---|---|---|---|---|---|---|---|---|---|
| Water Fund | | | | | | | | | 1,100,000 | | 1,100,000 |
| **Total** | | | | | | | | | **1,100,000** | | **1,100,000** |

## Budget Impact/Other

Town of Nantucket, Massachusetts

*Capital Improvement Plan*

2018 thru 2027

# PROJECTS BY DEPARTMENT

| Department | # | Priorit | 2018 | 2019 | 2020 | 2021 | 2022 | 2023 | 2024 | 2025 | 2026 | 2027 | Total |
|---|---|---|---|---|---|---|---|---|---|---|---|---|---|
| **Our Island Home** | | | | | | | | | | | | | |
| OIH Exterior Trim and Side Wall | *OIH-18-001* | 1 | 343,500 | | | | | | | | | | *343,500* |
| OIH Kitchen Renovation and Laundry | *OIH-18-002* | 1 | 200,000 | | | | | | | | | | *200,000* |
| OIH Tub aand Shower Room | *OIH-18-003* | 1 | 325,000 | | | | | | | | | | *325,000* |
| **Our Island Home Total** | | | **868,500** | | | | | | | | | | ***868,500*** |
| **GRAND TOTAL** | | | **868,500** | | | | | | | | | | ***868,500*** |

**Project #** OIH-18-003

**Project Name** OIH Tub aand Shower Room

**Department** Our Island Home

**Contact** Rachel Chretien

**Type** Maintenance

**Useful Life**

**Category** Facilities Upgrades and Improvements

**Priority** 1 Critical

**Fund Type** Enterprise Fund

**Enterprise Fund** Our Island Home

**Location**

**Total Cost** $325,000

## Description

This project will replace all sinkes, toilets, tubs, flooring and tile work in the tub and shower room.

## Justification

| Expenditures | 2018 | 2019 | 2020 | 2021 | 2022 | 2023 | 2024 | 2025 | 2026 | 2027 | Total |
|---|---|---|---|---|---|---|---|---|---|---|---|
| Construction/Maintenance | 325,000 | | | | | | | | | | 325,000 |
| **Total** | **325,000** | | | | | | | | | | **325,000** |

| Funding Sources | 2018 | 2019 | 2020 | 2021 | 2022 | 2023 | 2024 | 2025 | 2026 | 2027 | Total |
|---|---|---|---|---|---|---|---|---|---|---|---|
| Our Island Home Retained Earnings | 325,000 | | | | | | | | | | 325,000 |
| **Total** | **325,000** | | | | | | | | | | **325,000** |

## Budget Impact/Other

**Project #** OIH-18-002

**Project Name** OIH Kitchen Renovation and Laundry

**Department** Our Island Home
**Contact** Rachel Chretien
**Type** Improvement
**Useful Life**
**Category** Buildings
**Priority** 1 Critical

**Fund Type** Enterprise Fund
**Enterprise Fund** Our Island Home
**Location** None

**Total Cost** $200,000

## Description

## Justification

| Expenditures | 2018 | 2019 | 2020 | 2021 | 2022 | 2023 | 2024 | 2025 | 2026 | 2027 | Total |
|---|---|---|---|---|---|---|---|---|---|---|---|
| Construction/Maintenance | 100,000 | | | | | | | | | | 100,000 |
| Equip/Vehicles/Furnishings | 100,000 | | | | | | | | | | 100,000 |
| **Total** | **200,000** | | | | | | | | | | **200,000** |

| Funding Sources | 2018 | 2019 | 2020 | 2021 | 2022 | 2023 | 2024 | 2025 | 2026 | 2027 | Total |
|---|---|---|---|---|---|---|---|---|---|---|---|
| Operations Fund | 200,000 | | | | | | | | | | 200,000 |
| **Total** | **200,000** | | | | | | | | | | **200,000** |

## Budget Impact/Other

**Project #** OIH-18-001

**Project Name** OIH Exterior Trim and Side Wall

**Department** Our Island Home
**Contact** Rachel Chretien
**Type** Improvement
**Useful Life**
**Category** Buildings
**Priority** 1 Critical

**Fund Type** Enterprise Fund
**Enterprise Fund** Our Island Home
**Location** None

**Total Cost** $343,500

## Description

## Justification

| Expenditures | 2018 | 2019 | 2020 | 2021 | 2022 | 2023 | 2024 | 2025 | 2026 | 2027 | Total |
|---|---|---|---|---|---|---|---|---|---|---|---|
| Construction/Maintenance | 343,500 | | | | | | | | | | 343,500 |
| **Total** | **343,500** | | | | | | | | | | **343,500** |

| Funding Sources | 2018 | 2019 | 2020 | 2021 | 2022 | 2023 | 2024 | 2025 | 2026 | 2027 | Total |
|---|---|---|---|---|---|---|---|---|---|---|---|
| Operations Fund | 343,500 | | | | | | | | | | 343,500 |
| **Total** | **343,500** | | | | | | | | | | **343,500** |

## Budget Impact/Other