#39-16 Richmond Great Point Development, LLC
Old South Road Crossing Retail Liner Buildings
63, 67, 73, 75A Old South Road
Map 68 Parcels 157, 158, 129 & 999.2

THE RICHMOND COMPANY, INC.

The Richmond Company, Inc.
23 Concord Street
Wilmington, Massachusetts 01887
(979) 988-3900

June 13, 2016

TOWN OF NANTUCKET
TOWN CLERK
16 Broad Street
Nantucket, Massachusetts 02554

Attention: Catherine Flanagan Stover, MMC, CMMC

Subject: Submittal of Application for Special Permit (Retail Major Commercial Development)
Richmond Great Point Development LLC (Owner / Developer)
Old South Road Crossing Retail "Liner" Buildings Development

Dear Mrs. Stover:

The purpose of this correspondence, issued in our capacity as the applicant and development manager, on behalf of the owner of the subject properties (Richmond Great Point Development LLC) is to document submittal of the completed application to petition the Town of Nantucket Planning Board to consider the above-captioned proposal which requires the issuance of a special permit to allow for the development of the "Old South Road Crossing" retail "liner" buildings development, comprised of +/- 15,500 gross square feet of retail buildings on a series of five (5) contiguous properties totaling +/- 2.4 acres of land located on portions of the 63, 67, 73 and 75 (A) Old South Road properties.

The submittal of the application to your office is being completed as prescribed in Section 139-30(B)(1) of the Town of Nantucket Zoning Bylaw.

Upon your acknowledgment of receipt of the application (by way of time / date stamping the application), we will proceed to file a copy of the application (and all other required materials) forthwith to the Town of Nantucket Planning Board to obtain its review and subsequent action (as prescribed in Section 139-30(B)(2) of the Town of Nantucket Zoning Bylaw.

Should you have any questions with respect to the application and submittal, please feel free to contact me at 978-988-3900, Extension # 12.

Very truly yours,

David J. Armanetti
Director of Real Estate Development
The Richmond Company, Inc.
On Behalf of Richmond Great Point Development LLC

Cc: Andrew Burek, Esq., TRC
Arthur Reade, Jr., Esq., RGH

RECEIVED
JUN 15 2016
By

Nantucket Planning Board

Application for a Special Permit

Date: June 13, 2016 File #: 39-16

Name of development: Old South Road Crossing Retail "Liner" Buildings

Owner(s) name(s): Richmond Great Point Development LLC (Philip Pastan)

Mailing address: 23 Concord Street, Wilmington MA 01887
Phone number: 978-988-3900 Fax number: 978-988-3950

E-mail: ppastan@richmondco.com

Applicant's name: The Richmond Company, Inc. (David Armanetti and Patty Roggeveen)
Mailing address: 23 Concord Street, Wilmington MA 01887
Phone number: 978-988-3900 Fax number: 978-988-3950
E-mail: darmanetti@richmondco.com; proggeveen@richmondco.com

Engineer / surveyor's name: Hayes Engineering, Inc. (John Ogren)

Mailing address: 603 Salem Street, Wakefield MA 01880 Phone number: 781-246-2800 Fax number: 781-246-7596 E-mail: jogren@hayeseng.com

Location of lot(s):

Street address Portions of 63, 67, 73, and 75(A) Old South Road

Tax Assessors Map Parcel See Attachment "A" for Detail of Multiple Parcels

Nantucket Registry of Deed: See Attachment "B" for Detail of Multiple Parcels
Plan Book Page **OR**

Plan File # **OR** Land Court Plan # at Certificate #

Size of parcel: 104,109 SF (2.39 Acres) sq. ft. Zoning District: Commercial Neighborhood (CN)

Special Permit sought: (check one)

- ❍ Cluster subdivision
- ❍ Commercial WECS
- ❍ Driveway Access/Curb Cut Special Permit
- ❍ Harbor Overlay District (HOD)
- ❍ Major Commercial Development (MCD)

- ❍ Multi-family Special Permit
- ❍ Moorlands Management District Subdivision or Construction (MMD)
- ❍ NEHOD (Neighborhood Employee Housing Overlay District)
- ❍ MRD (Major Residential Development)
- ❍ MIPOD (Mid-Island Planned Overlay District)
- ❍ Other Uses Requiring a Special Permit (specify all uses and *Nantucket Code* sections)

Section	Description

Specify all associated Zoning Code relief sought:

Section	Description
139-18(B) - Required parking spaces - request a waiver for four (4) parking space deficit (93 required, 89 provided)	
139-18(A)(4) - Required parking to be provided on same lot - request a waiver for several parking spaces in immediately adjacent lots to be shared in common through binding easement) .	
139-20.1(B)(2)(f)[1] - Maximum driveway corning roundings - request waiver to allow driveway corner roundings with radii up to twenty-eight (28) feet, to better accomodate truck traffic and deliveries.	

Only the zoning relief expressly requested above will be considered as part of this application.

If applying for a Major Commercial Development, specify how the application will comply with Section 139-11 (J) of the *Zoning Code of the Town of Nantucket*, also known as the Town's Affordable Housing Effort:

Owner / Applicant for this MCD is concurrently developing 56 statutorily affordable rental units and 26 statutorily affordable home ownership units on immediately adjacent properties.

Planning Board filing fee due: $_____

Engineering Inspection Escrow Deposit due: $_____

I/ we hereby certify that the applicant(s) cited above have been authorized by me/ us to file a Special Permit application with the Planning Board on property that I/ we own.

_____

_____

Owner(s)' Signature(s) Philip Pastan, as Manager of Richmond Great Point Development LLC

_____

Applicant's Signature

6/13/16

I/we _____, the undersigned, hereby authorize _____ to act as agent(s) on my/our behalf and to make any necessary revisions on this filed application as they may be requested by the Board to meet its governing rules and guidelines.

_____

_____

Owner(s)' signature(s)

Check List:

- ❑ Planning Board Special Permit abutters list – to be obtained at the Tax Assessor's office
- ❑ Completed application form entitled "Application to the Planning Board for a Special Permit"
- ❑ Application fee of $250.00 payable to Town of Nantucket
- ❑ Abutters fee of $6.11 per abutters payable to Pitney Bowes Reserved Funds
- ❑ Four (4) sets of mailing labels with each abutter's name and address
  - 1" x 2 5/8" size, typed labels, are preferred
  - duplicate labels are not necessary if the same owner is listed for more than one abutting property
- ❑ Completed application form
- ❑ Town Clerk's stamped application (provide 2 copies-one for Town Clerk and one for Planning Board)

"Attachment A" to
Major Commercial Development / Special Permit Application

Old South Crossing Retail "Liner" Buildings Development
63, 67, 73, and 75(A) Old South Road, Town of Nantucket MA

ADDITIONAL SPACE NEEDED TO PROVIDE DETAILED INFORMATION FOR MULTIPLE PARCELS

---

63 Old South Road (Portion of 3.41 Acre Total)

Tax Assessors Map Information: Map # 68, Parcel # 157

Registry / Plan Information; Lot # 872 on Land Court Plan # 16514-103)
(Land Court Certificate # 24872)

67 Old South Road (Portion of 1.69 Acre Total)

Tax Assessors Map Information: Map # 68, Parcel # 158

Registry / Plan Information; Lot # 59 on Land Court Plan # 16514-L)
(Land Court Certificate # 24872)

73 Old South Road (Portion of 2.92 Acre Total)

Tax Assessors Map Information: Map # 68, Parcel # 129

Registry / Plan Information; Lot # 853 on Land Court Plan # 16514-97)
(Land Court Certificate # 24872)

75(A) Old South Road (Portion of 0.35 Acre Total)

Tax Assessors Map Information: Map # 68, Parcel # 999.2

Registry / Plan Information; Lot # 858 on Land Court Plan # 16514-100)
(Land Court Certificate # 25525)

"Attachment B" to
Major Commercial Development / Special Permit Application

Old South Crossing Retail "Liner" Buildings Development
63, 67, 73, and 75(A) Old South Road, Town of Nantucket MA

The title to the land included in the above-referenced application is derived as follows:

As to the Owner of One Hundred Percent (100%) of the 63 Old South Road Property

RICHMOND GREAT POINT DEVELOPMENT LLC

"*Deed*" dated August 7, 2013, recorded at the Nantucket County Registry of Deeds, in Book # 01397, Page # 312, recorded on August 8, 2013 (referred to as "Recorded Land – Parcel Thirty-Three" on Page 7 of the "*Deed*").

As to the Owner of One Hundred Percent (100%) of the 67 Old South Road Property

RICHMOND GREAT POINT DEVELOPMENT LLC

"*Deed*" dated August 7, 2013, recorded at the Nantucket County Registry of Deeds, in Book # 01397, Page # 312, recorded on August 8, 2013 (referred to as "Recorded Land – Parcel One" on Page 1 of the "*Deed*").

As to the Owner of One Hundred Percent (100%) of the 73 Old South Road Property

RICHMOND GREAT POINT DEVELOPMENT LLC

"*Deed*" dated August 7, 2013, recorded at the Nantucket County Registry of Deeds, in Book # 01397, Page # 312, recorded on August 8, 2013 (referred to as "Recorded Land – Parcel Forty-Three" on Page 9 of the "*Deed*").

As to the Owner of One Hundred Percent (100%) of the 75(A) Old South Road Property

RICHMOND GREAT POINT DEVELOPMENT LLC

"*Deed*" dated February 5, 2015, recorded at the Nantucket County Registry of Deeds, as Certificate # 25525, Document # 00147075, recorded on February 6, 2015 (referred to as "Lot 858 on Land Court Plan numbered 16514-100").

THE RICHMOND COMPANY, INC.

The Richmond Company, Inc.
23 Concord Street
Wilmington, Massachusetts 01887
(979) 988-3900

June 10, 2016

TOWN OF NANTUCKET
PLANNING BOARD
2 Fairgrounds Road
Nantucket, Massachusetts 02554

Attention: Leslie Woodson Snell, AICP, LEED AP, Deputy Director of Planning

Subject: Submittal of Application for Major Commercial Development / Special Permit (Retail)
Old South Crossing Retail "Liner" Buildings / 63, 67, 73, and 75(A) Old South Road
Richmond Great Point Development LLC (Owner / Developer)

Dear Ms. Snell:

The purpose of this correspondence, issued in our capacity as the applicant and development manager, on behalf of the owner of the subject properties (Richmond Great Point Development LLC) is to submit the completed application form, plans, drainage reports, and related materials which are required to petition the Town of Nantucket Planning Board to consider the above-captioned proposal which requires the issuance of a master commercial development / special permit to allow for the development of the series of retail "liner" buildings which are proposed to be located on a combination of five contiguous properties comprising +/- 2.39 acres of land located on portions of 63, 67, 73, and 75(A) Old South Road, fronting on Old South Road, east of Lovers Lane, in the northwestern core of the properties which were acquired by Richmond Great Point Development LLC from Walter J. Glowacki in August of 2013.

The proposed project is comprised of a cumulative total of +/- 15,500 gross square feet of retail, personal services, and restaurant space, allocated within a series of five (5) single story buildings, running from west to east along the frontage of Old South Road, integrated with connecting walkways, parking, and vehicular access. The size of the individual buildings, running from west to east, range in size from 5,170 gross square feet, to 3,235 gross square feet, to 2,400 gross square feet, to 1,500 gross square feet, to 3,200 gross square feet (with an additional 1,200 square feet area for outdoor seating).

The uses, sizes, location, orientation (fronting on Old South Road) and the character of the buildings are expressly consistent with the objectives and recommendations set forth in the land use section of the '*Naushop Crossing Area Plan*" which was created over a two year period by the Naushop Crossing Area Plan Work Group, and was adopted by the Nantucket Planning and Economic Development Commission in March of 2014.

The entirety of the property is designated within the Commercial-Neighborhood (CN) zoning district, which permits the development of retail, personal services, and restaurant uses (small / up to 70 seats).

Because the proposed project is comprised of 5,000 gross square feet or more of commercial use, "located on contiguous tracts of land and held in common or control" in the aggregate, it is subject to the issuance of a major commercial development / special permit by the Planning Board (as set forth in Section 139-11 and Section 139-30 of the Town of Nantucket Zoning Bylaw).

The proposed project is also subject to compliance with the applicable intensity and dimensional criteria set forth in Section 139-16 of the Town of Nantucket Zoning Bylaw (including but not limited to minimum lot size, frontage, yard setbacks, ground cover ratio, and (lot) regularity factor).

Because it is subject to issuance of a major commercial development / special permit, the proposed subject is subject to major site plan review (MSPR) by the Planning Board (as set forth in Section 139-23, and specifically Section 139-23(B)(2) of the Town of Nantucket Zoning Bylaw).

Each of the five (5) individual proposed buildings is located on a separate buildable lot (the subdivision for which will be achieved by way of the processing and endorsement of an Approval Not Required (ANR) Plan) which has been submitted to and is expected to be endorsed by the Planning Board at its June 13, 2016 meeting.

The lots resulting from the proposed subdivision action (in order to accommodate the development of the proposed project) will meet or exceed the relevant dimensional criteria and related requirements, as such are established in the local zoning bylaw for the applicable zoning district, including but not limited to the following:

- Minimum Lot Area (Not Less than 7,500 Square Feet)
- Minimum Lot Frontage (Not Less than 50 Linear Feet)
- Minimum Lot Regularity Factor (Not Less than 0.55)

The specific dimensional characteristics of the five (5) lots that are proposed to be created (in order to accommodate the development of the proposed project) will be as follows:

Old South Crossing Retail Liner Buildings Project
Summary of Dimensional Characteristics (Proposed Lots / Buildings)

Lot Number on Plan	Lot Area (Square Footage)	Lot Frontage (Linear Feet)	Lot Regularity Factor (rf)
Lot # 1 / Building # 1	40,925	181.78	0.939
Lot # 2 / Building # 2	16,232	114.52	1.009
Lot # 3 / Building # 3	13,583	92.41	0.948
Lot # 4 / Building # 4	8,163	55.54	0.796
Lot # 5 / Building # 5	25,206	171.72	0.992
Subtotal (Average)	**104,109 (2.39 A)**	**123.19**	**0.937**

The proposed project meets or exceeds all of the applicable intensity and dimensional criteria set forth in the Town of Nantucket Zoning Bylaw, including the maximum ground cover and the regularity factor. A summary of the proposal for most of the relevant criteria, broken out by lot / building for each of the five (5) individual buildings, are depicted in the "Zoning Table" that is included on the cover sheet of the plan set that is included as part of this submittal.

A total of eighty-nine (89) off street parking spaces have been proposed to serve the project. A total of ninety-three (93) spaces are required, based on the minimum parking requirements set forth in Section 139-18 of the Town of Nantucket Zoning Bylaw (Off Street Parking Requirements), resulting in the project providing ninety-six percent (96%) of the total required off street parking. Based on the foregoing, a waiver is requested to allow for approval of the project with the anticipated deficit of four (4) off street parking spaces.

The basis and justification for the requested waiver is set forth herein. Because the parking, as designed, is located in adjacent, physically interconnected lots and because the nature of the retail, personal services, and restaurant uses that are anticipated often generate multiple uses by the same patrons during a single trip to the property, and because the nature and operating hours of the specific uses that generally occupy such multi-building and multi-tenant retail clusters create different peaks of operation and gaps in opening / closing times and operating hours, we believe that the four (4) parking space deficit will be deminimus and will not adversely impact the operation of the proposed project and that the parking provided will be more than sufficient.

In addition, because of the nature of the design of the vehicular circulation system and "parking islands" in order to meet the required subdivision and frontage requirements, and to allow for greater open space and a better aesthetic layout overall, the parking lots serving several of the buildings have been consolidated and interconnected as such to where some of the individual parking spaces overlap into adjacent (interior) lots. As a result, a second parking-related waiver is requested, from the requirement set forth in Section 139-18(A)(4) that "all off street parking spaces shall be provided on the same lot as the principal or accessory use they are required to serve".

Should the Planning Board approve the relief described above, the rights and conditions of the shared parking between the lots and uses will be documented in a binding easement that will be recorded and will be applicable to all of the lots, which will essentially function as a small, integrated shopping center.

We appreciate the opportunity to submit the application, plans, and supporting materials for this important development proposal for your review and for consideration by the Planning Board and we look forward to commencing with the public hearing and public review process.

If you have any immediate questions with respect to the proposed project or any of the submittal materials, please feel free to contact me at 978-988-3900, Extension # 12.

Very truly yours,

David J. Armanetti
Director of Real Estate Development
The Richmond Company, Inc.
On Behalf of Richmond Great Point Development LLC

Cc: Philip Pastan, TRC
Kathryn Fossa, TRC
Patricia Roggeveen, RGPDLLC
Shane Valero, RGPDLLC
Andrew Burek, Esq., RGPDLLC
Arthur Reade Jr., Esq., RGH
John Ogren, Hayes Engineering

OLD SOUTH ROAD CROSSING RETAIL "LINER BUILDINGS"

MAJOR COMMERCIAL DEVELOPMENT/ SPECIAL PERMIT SITE PLAN

AT

63, 67, 73 and 75A OLD SOUTH ROAD
NANTUCKET, MASSACHUSETTS

LEGEND OF SYMBOLS & ABBREVIATIONS

EXISTING		PROPOSED
BM No.1	BENCH MARK	P-BM No.1
BB	BITUMINOUS BERM	PBB
CCB	BITUMINOUS CAPE COD BERM	PCCB
	BUILDING	
CATV	UNDERGROUND CABLE	P-CATV
57	COUNTOUR (1')	57
60	CONTOUR (5')	60
EL. 57.2	ZONE A (100-YEAR FLOOD ZONE)	N/A
CONC.	CEMENT CONCRETE	CONC.
SGC	SLOPED GRANITE CURB	PSGC
VGC	VERTICAL GRANITE CURB	PVGC
EOD	EDGE OF DISTURBANCE	LOW
D	UNDERGROUND DRAIN PIPE	D
	CATCH BASIN	
	DRAIN MANHOLE	
	ROUND CATCH BASIN	
E	UNDERGROUND ELECTRIC	E
X	CHAIN LINK FENCE	X
	POST & RAIL FENCE	
	STOCKADE FENCE	
	VINYL FENCE	
FFE= 60.43 GFE= 57.65	FINISHED FLOOR ELEVATION	FF= 60.43
	GARAGE FLOOR ELEVATION	GF= 57.65
FDN	FOUNDATION	W=119.00
G	UNDERGROUND GAS MAIN	G
GS	UNDERGROUND GAS SERVICE	GS
GRAVEL	EDGE OF GRAVEL	GRAVEL
x 57.83	SPOT GRADE	52X3
GUARD RAIL	GUARD RAIL	PR. GUARD RAIL
	HANDICAP PLACARD PARKING	
WCR	WHEEL CHAIR RAMP	WCR
	HEADWALL	
LDSCP	LANDSCAPE AREA	P-LDSCP
LEDGE	LEDGE OUTCROP	PROP. LEDGE
	BOLLARD	
OHW	OVERHEAD WIRE	P-OHW
UP No. 1	UTILITY POLE	PROP. UP
7 spaces	PAINTED PARKING & SPACE COUNT	7 spaces
PATH	PATH	PR. PATH
EP	EDGE OF PAVEMENT	PR. EP
BIT. RIP-RAP	BOULDER RIP-RAP & SLOPE	PR. BIT. RIP-RAP
S	UNDERGROUND SEWER	S
SS	UNDERGROUND SEWER SERVICE	SS
	SEWER MANHOLE	
	SEWER CLEANOUT	
BIT. SIDEWALK 4'w.	BITUMINOUS CONCRETE SIDEWALK	4'w BIT. SIDEWALK
SIGN	SIGN	SIGN
	EROSION & SEDIMENTATION CONTROL	
	STEPS	
BLDR	BOULDER	
	STONEWALL	
	CENTERLINE OF SWALE	SWALE
T	UNDERGROUND TELEPHONE	T
	TESTHOLE LOCATION	PR. TH-1
	MONITORING WELL LOCATION	P-MW
	PERCOLATION TEST LOCATION	PR. TS-1
SINGLE WHITE	PAINTED TRAFFIC LINE & TYPE	PR. SINGLE WHITE
12" MAPLE	DECIDUOUS TREE, SIZE & TYPE	2" OAK
6" PINE	CONIFEROUS TREE, SIZE & TYPE	2" PINE
ARBORVITAE	HEDGE ROW AND TYPE	PR. ARBORVITAE
BW=57.5	RETAINING WALL	PBW=57.5
TW=60.5	UNDERGROUND WATER MAIN	PTW=60.5
W	UNDERGROUND WATER SERVICE	W
WS	PAINTED UNDERGROUND WATER	WS
W-PNT	WATER GATE VALVE BOX	N/A
	WATER SERVICE CURB BOX	

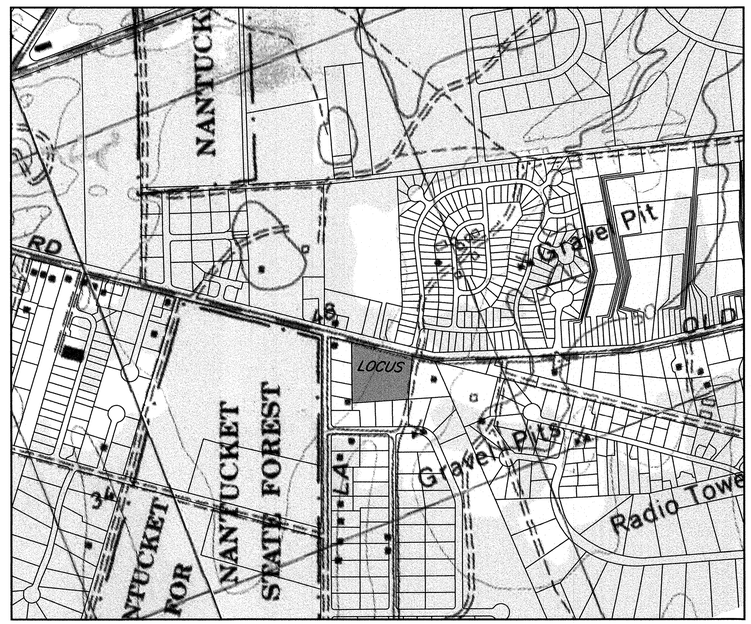

KEY MAP
SCALE: 1"=500'±
0' 500' 1,000'

SOURCE: USGS science for a changing world

ZONING TABLE

ZONE	CN	LOT 1	LOT 2	LOT 3	LOT 4	LOT 5
DIMENSIONAL CONTROLS	REQUIRED/ALLOWED	PROVIDED	PROVIDED	PROVIDED	PROVIDED	PROVIDED
FRONT YARD SETBACK	10 ft.	40.0 ft.	24.2 ft.	25.2 ft.	25.1 ft.	25.2 ft.
SIDE YARD SETBACK	5 ft.	39.9 ft.	14.1 ft.	10.0 ft.	8.0 ft.	42.5 ft.
REAR YARD SETBACK	10 ft.	97.4 ft.	73.2 ft.	72.2 ft.	72.1 ft.	72.2 ft.
MIN. FRONTAGE	50 ft.	181.78 ft.	114.52	92.41 ft.	55.54 ft.	171.72 ft.
MIN. LOT AREA	7,500 s.f.	40,925 sf.	16,232 sf.	13,583 sf.	8,163 sf.	25,206 sf.
MAX. GROUND COVER RATIO	40%	12.6%	19.9%	17.7%	18.4%	12.7%
MIN. OPEN AREA	30% (MCD)	41.5%	31.3%	29.9%	37.3%	39.2%

PROPERTY LIES WITHIN THE WELLHEAD PROTECTION DISTRICT.

NOTES:

1. LOT LINES DEPICTED HEREON ARE TAKEN FROM "SUBDIVISION PLAN OF LAND IN NANTUCKET, MASS." DATE JULY 16, 2015 REVISED THROUGH OCTOBER 5, 2015 PREPARED BY HAYES ENGINEERING, INC.
2. TOPOGRAPHIC INFORMATION DEPICTED HEREON IS THE RESULT OF AN ACTUAL FIELD SURVEY PERFORMED BY HAYES ENGINEERING, INC. ON THE FOLLOWING DATES:
   a. SEPTEMBER 22, 2014
   b. JUNE 16, 2015
   c. SEPTEMBER 17, 2015
3. THE DATUM IS NORTH AMERICAN VERTICAL DATUM OF 1988 (NAVD88).
4. THE ENTIRE PARCEL IS LOCATED WITHIN THE WATER RESOURCE PROTECTION DISTRICT, ZONE II WELLHEAD PROTECTION AREA.
5. THE PROPERTY IS NOT LOCATED WITHIN A FLOOD HAZARD ZONE (A or V) AS DEPICTED ON FLOOD INSURANCE RATE MAP COMMUNITY PANEL NUMBER 25019C 0089G EFFECTIVE JUNE 9, 2014.
7. THE UNDERGROUND UTILITIES SHOWN HAVE BEEN COMPILED FROM FIELD SURVEY INFORMATION AND AVAILABLE EXISTING DRAWINGS. THE SURVEYOR MAKES NO GUARANTEE THAT THE UNDERGROUND UTILITIES SHOWN COMPRISE ALL SUCH UTILITIES IN THE AREA, EITHER IN SERVICE OR ABANDONED. FURTHER, THE SURVEYOR HAS NOT PHYSICALLY LOCATED THE UNDERGROUND UTILITIES AND DOES NOT WARRANT THAT THE UNDERGROUND UTILITIES SHOWN ARE IN THE EXACT LOCATION INDICATED ALTHOUGH HE DOES CERTIFY THAT THEY ARE LOCATED AS ACCURATELY AS POSSIBLE FROM THE INFORMATION AVAILABLE.
8. THE CONTRACTOR SHALL BE RESPONSIBLE FOR CHECKING AND VERIFYING THE LOCATIONS, SIZES, AND ELEVATIONS OF ALL EXISTING UTILITIES SHOWN OR NOT SHOWN ON THESE PLANS AND SHALL NOTIFY THE ENGINEER IN WRITING OF ANY UTILITIES INTERFERING WITH THE PROPOSED DESIGN AND THE APPROPRIATE REMEDIAL ACTION PRIOR TO PROCEEDING WITH THE WORK.
9. THE CONTRACTORS ARE RESPONSIBLE FOR CONTACTING DIG SAFE AT (800) 322-4844 PRIOR TO THE START OF ANY CONSTRUCTION.

WAIVERS REQUESTED:

1. §139-20.1.B(2)(f)[1] MAXIMUM DRIVEWAY CORNER ROUNDINGS: ALLOW CORNER ROUNDINGS WITH RADII UP TO 28'.
2. §139-18.A(4) REQUIRED OFF STREET PARKING SHALL BE PROVIDED ON THE SAME LOT AS THE PRINCIPAL OR ACCESSORY USE THEY ARE REQUIRED TO SERVE: ALLOW CROSS ACCESS EASEMENTS FOR PARKING.
3. §139-18.B PARKING REQUIREMENTS: ALLOW 89 SPACES IN PLACE OF THE 93 SPACES REQUIRED.

PARKING CALCULATIONS

LOT NO.	REQUIRED	PROVIDED
LOT 1	RETAIL – 1 space PER 200sf OF GROSS FLOOR AREA (GFA) (5,170sf GFA)(1sp/200sf) = 25.8 spaces 1 space PER 3 employees on peak shift (6 employees)(1sp/3emp) = 2 spaces Total = 28 spaces REQUIRED HANDICAPPED ACCESSIBLE SPACES REQUIRED = 2sp	22 spaces (2 handicapped accessible)
LOT 2	RETAIL – 1 space PER 200sf OF GROSS FLOOR AREA (GFA) (3,235sf GFA)(1sp/200sf) = 16.2 spaces 1 space PER 3 employees on peak shift (3 employees)(1sp/3emp) = 1 spaces Total = 17 spaces REQUIRED HANDICAPPED ACCESSIBLE SPACES REQUIRED = 1sp	17 spaces (1 handicapped accessible)
LOT 3	RETAIL – 1 space PER 200sf OF GROSS FLOOR AREA (GFA) (2,400sf GFA)(1sp/200sf) = 12 spaces 1 space PER 3 employees on peak shift (3 employees)(1sp/3emp) = 1 spaces Total = 13 spaces REQUIRED HANDICAPPED ACCESSIBLE SPACES REQUIRED = 1sp	14 spaces (1 handicapped accessible)
LOT 4	RETAIL – 1 space PER 200sf OF GROSS FLOOR AREA (GFA) (1,500sf GFA)(1sp/200sf) = 7.5 spaces 1 space PER 3 employees on peak shift (3 employees)(1sp/3emp) = 1 spaces Total = 9 spaces REQUIRED HANDICAPPED ACCESSIBLE SPACES REQUIRED = 1sp	9 spaces (1 handicapped accessible)
LOT 5	RESTAURANT, TAVERNS AND BARS, including outside seated-service areas – 1 space PER 3 seats (70 seats)(1sp/3 seats) = 23.3 spaces 1 space PER 3 employees on peak shift (9 employees)(1sp/3emp) = 3 spaces Total = 26 spaces REQUIRED HANDICAPPED ACCESSIBLE SPACES REQUIRED = 2sp	27 spaces (2 handicapped accessible)
TOTAL	93 PARKING SPACES	89 PARKING SPACES

NOTE:

CROSS ACCESS AND PARKING EASEMENTS TO BE PROVIDED FOR ALL DRIVEWAYS AND PARKING DEPICTED HEREON.

SHEET INDEX

PLAN TITLE	SHEET DESIGNATION
INDEX	C1
EXISTING CONDITIONS	C2
LAYOUT	C3
GRADING	C4
UTILITIES	C5
DETAILS	C6
DETAILS	C7
INTERIM SITE PLAN	C8

Seal: PENNIS OGNIAN CIVIL No. 27148 REGISTERED PROFESSIONAL ENGINEER COMMONWEALTH OF MASSACHUSETTS 3/16

Prepared For:

Owner / Applicant
RICHMOND GREAT POINT DEVELOPMENT, LLC
41 CONCORD STREET
WILMINGTON, MA 01887
(978) 988-3900

Prepared By:

Hayes Engineering, Inc.
603 Salem Road
Westford, MA 01886
Ph: 781.246.2800
Fax: 781.246.7596
www.hayeseng.com

Design By: PJO
Drawn By: AMC
Checked By: PJO
Project File: NAN-0107T
Comp. No: NAN66

- [x] Issued For Permit
- [ ] Issued For Review
- [ ] Issued For Bid
- [ ] Issued For Construction
- [x] Not For Construction

No.	Revision	Date
1		
2		
3		
4		
5		
6		
7		
8		
9		
10		

Scale: 1"=30' (0' 15' 30' 60')

Date: June 10, 2016

Drawing Title:

OLD SOUTH ROAD CROSSING
INDEX PLAN
OLD SOUTH ROAD
NANTUCKET, MASS.

Drawing No.: C1

SHEET 1 OF 8

N:\NAN66SP_OSRliner_COMPILED.dwg, 6/13/2016 9:26:59 AM, TC

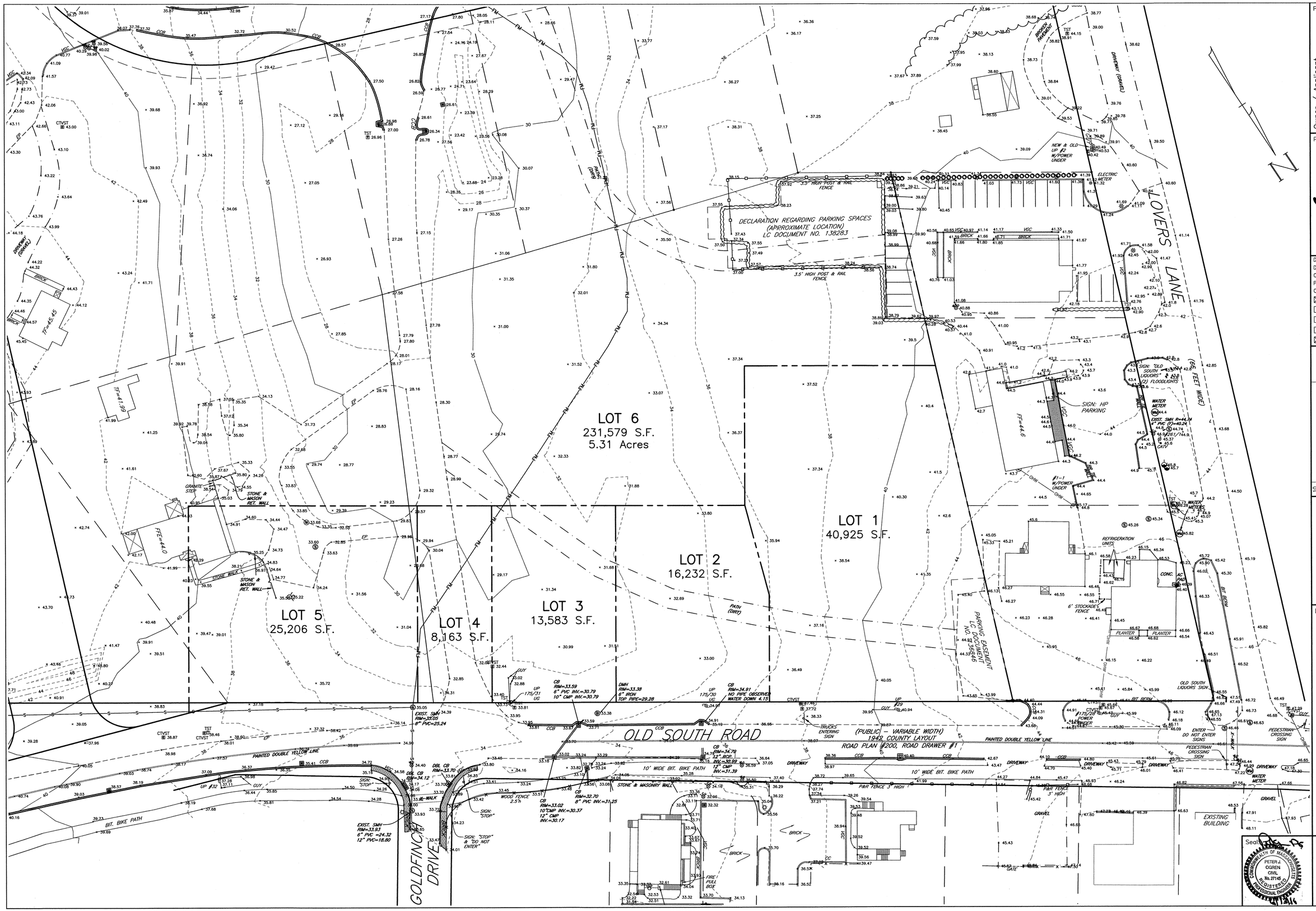

Prepared For:

Owner / Applicant

RICHMOND GREAT POINT DEVELOPMENT, LLC
23 CONCORD STREET
WILMINGTON, MA 01887
(978) 988-3900

Prepared By:

Hayes Engineering, Inc.
603 Salem Street
Wakefield, MA 01880
Ph: 781.246.2800
Fax: 781.246.7596
www.hayeseng.com

Design By: PJO
Drawn By: AMC
Checked By: PJO
Project File: NAN-0107T
Comp. No: NAN66

- [x] Issued For Permit
- [ ] Issued For Review
- [ ] Issued For Bid
- [ ] Issued For Construction
- [x] Not For Construction

No.	Revision	Date
10		
9		
8		
7		
6		
5		
4		
3		
2		
1		

Scale: 1"=30'

0' 15' 30' 60'

Date: June 10, 2016

Drawing Title:

OLD SOUTH ROAD CROSSING EXISTING CONDITIONS PLAN OLD SOUTH ROAD NANTUCKET, MASS.

Seal:

COMMONWEALTH OF MASSACHUSETTS
PETER J. OGREN
CIVIL
No. 27145
REGISTERED PROFESSIONAL ENGINEER

Drawing No.:

C2

SHEET 2 OF 8

N:\NAN66\SP_OSRliner_COMPILED.dwg, 6/13/2016 8:36:11 AM, TC

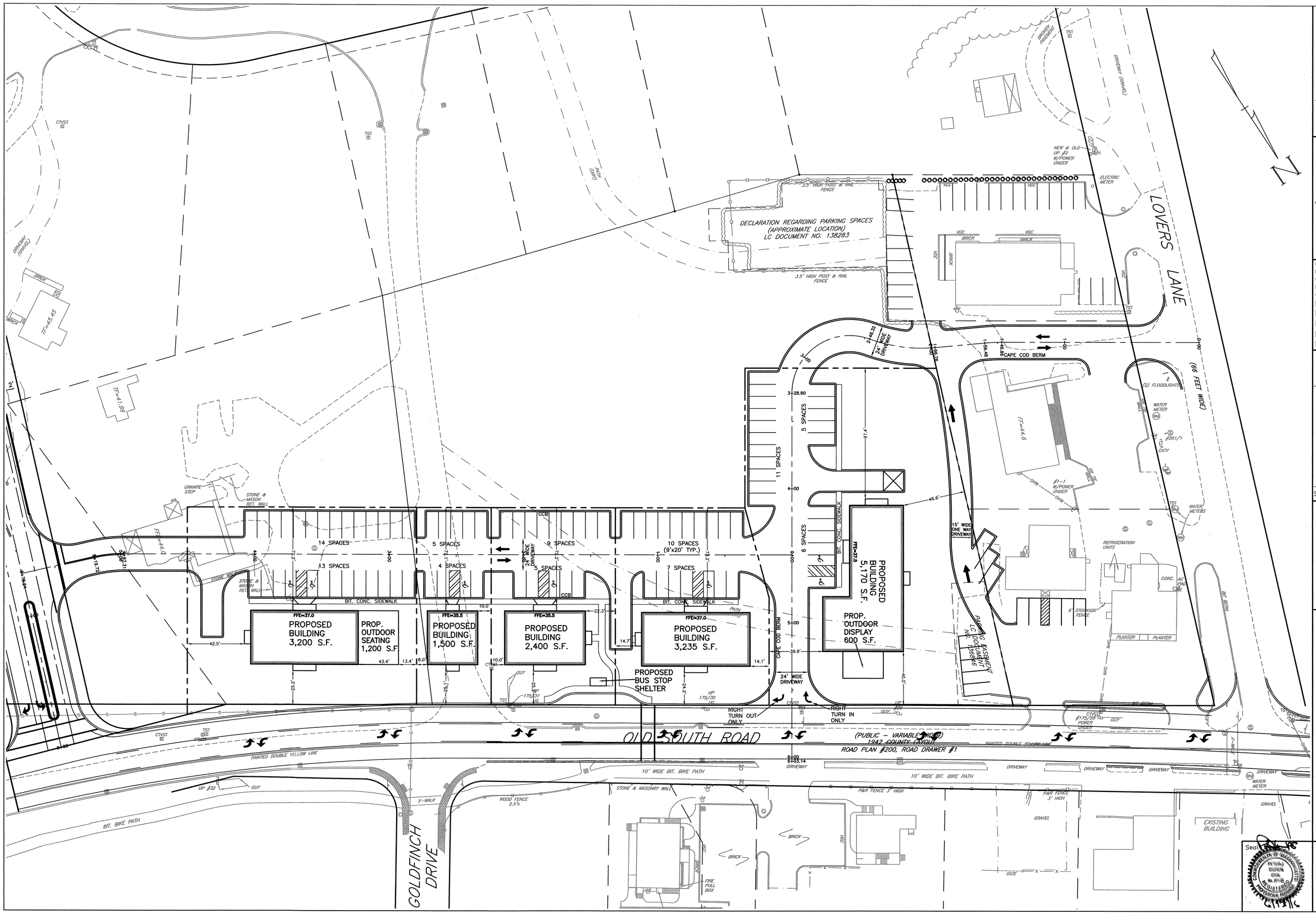

Prepared For:

Owner / Applicant

RICHMOND GREAT POINT DEVELOPMENT, LLC
23 CONCORD STREET
WILMINGTON, MA 01887
(978) 988-3900

Prepared By:

Hayes Engineering, Inc.
603 Salem Street
Wakefield, MA 01880
Ph: 781.246.2800
Fax: 781.246.7596
www.hayesengg.com

Design By:	PJO
Drawn By:	AMC
Checked By:	PJO
Project File:	NAN-0107T
Comp. No:	NAN66

- ☒ Issued For Permit
- ☐ Issued For Review
- ☐ Issued For Bid
- ☐ Issued For Construction
- ☒ Not For Construction

No.	Revision	Date
1		
2		
3		
4		
5		
6		
7		
8		
9		
10		

Scale: 1"=30'
0' 15' 30' 60'

Date: June 10, 2016

Drawing Title:

OLD SOUTH ROAD CROSSING
LAYOUT PLAN
OLD SOUTH ROAD
NANTUCKET, MASS.

Seal: COMMONWEALTH OF MASSACHUSETTS PETER J. OSHEN CIVIL No. 29148 REGISTERED PROFESSIONAL ENGINEER

Drawing No.:

C3

SHEET 3 OF 8

N:\NAN66\SP_OSRliner_COMPILED.dwg, 6/13/2016 8:34:06 AM, TC

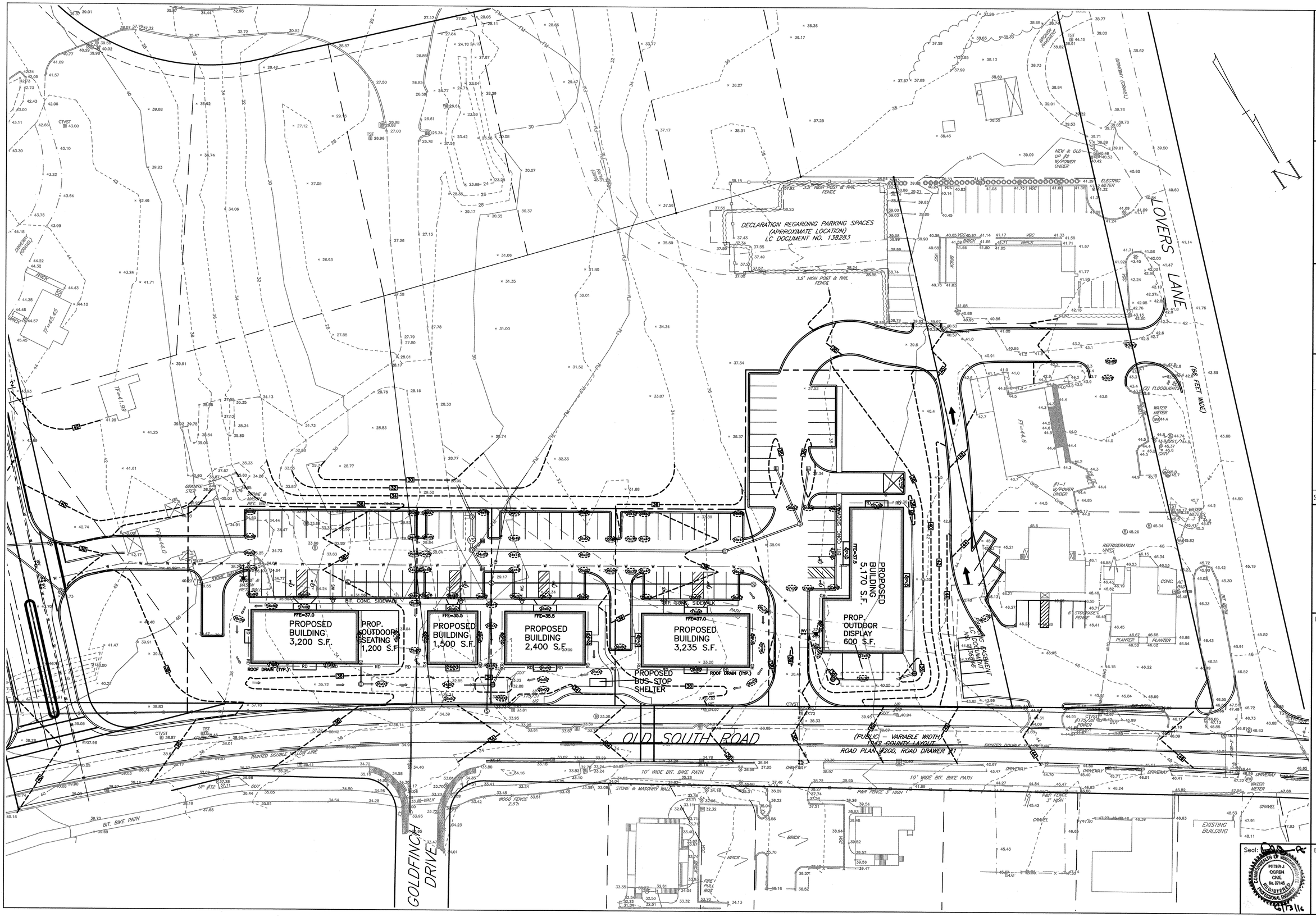

Prepared For:

Owner / Applicant

RICHMOND GREAT POINT DEVELOPMENT, LLC
403 CONCORD STREET
WILMINGTON, MA 01887
(978) 988-3900

Prepared By:

Hayes Engineering, Inc.
603 Salem Street
Wakefield, MA 01880
Ph: 781 246 2800
Fax: 781 246 7596
www.hayesengr.com

Design By:	PJO
Drawn By:	AMC
Checked By:	PJO
Project File:	NAN-0107T
Comp. No:	NAN66
☒ Issued For Permit	
☐ Issued For Review	
☐ Issued For Bid	
☐ Issued For Construction	
☒ Not For Construction	

No.	Revision	Date
1		
2		
3		
4		
5		
6		
7		
8		
9		
10		

Scale: 1"=30'

0' 15' 30' 60'

Date: June 10, 2016

Drawing Title:

OLD SOUTH ROAD CROSSING
GRADING PLAN
OLD SOUTH ROAD
NANTUCKET, MASS.

Seal: COMMONWEALTH OF MASSACHUSETTS PETER J. COREN CIVIL No. 27148 REGISTERED PROFESSIONAL ENGINEER 6/13/16

Drawing No.:

C4

SHEET 4 OF 8

N:\NAN66\SP_OSRliner_COMPILED.dwg, 6/13/2016 8:24:11 AM, TC

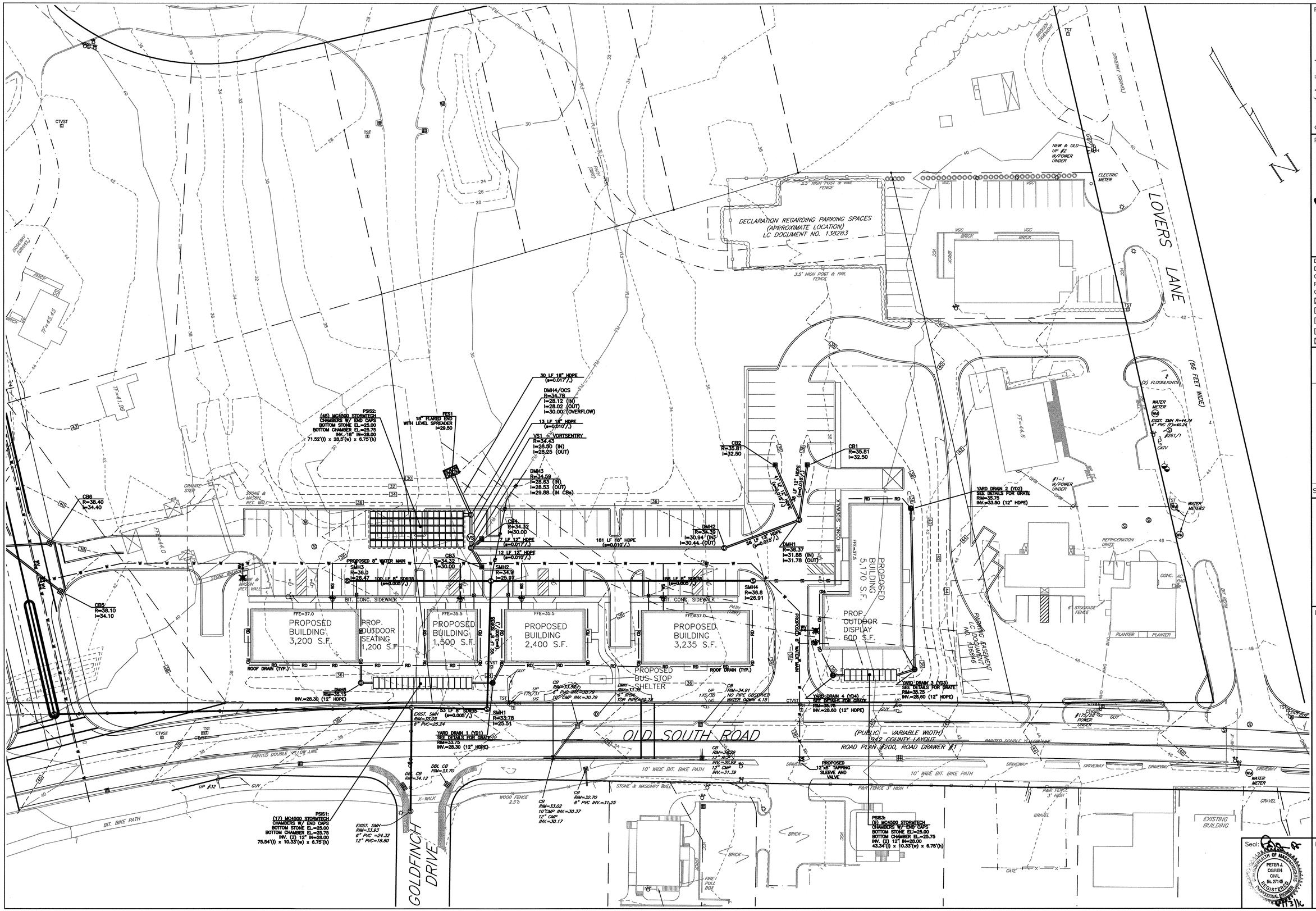

Prepared For:

Owner / Applicant

RICHMOND GREAT POINT DEVELOPMENT, LLC
23 CONCORD STREET
WILMINGTON, MA 01887
(978) 988-3800

Prepared By:

Hayes Engineering, Inc.
603 Salem Street
Wakefield, MA 01880
Phone: 781.246.7800
Fax: 781.246.7596
www.hayeseng.com

Design By: PJO
Drawn By: AMC
Checked By: PJO
Project File: NAN-0107T
Comp. No: NAN66

- [x] Issued For Permit
- [ ] Issued For Review
- [ ] Issued For Bid
- [ ] Issued For Construction
- [x] Not For Construction

No.	Revision	Date
1		
2		
3		
4		
5		
6		
7		
8		
9		
10		

Scale: 1"=30'
0' 15' 30' 60'

Date: June 10, 2016

Drawing Title:

OLD SOUTH ROAD CROSSING UTILITIES PLAN OLD SOUTH ROAD NANTUCKET, MASS.

Seal: COMMONWEALTH OF MASSACHUSETTS PETER J. OGREN CIVIL No. 27145 REGISTERED PROFESSIONAL ENGINEER

Drawing No.:

C5

SHEET 5 OF 8

N:\NAN66\SP_OSRliner_COMPILED.dwg, 6/13/2016 8:34:16 AM, TC

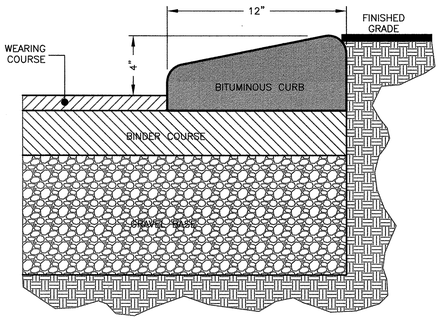

1 CAPE COD CURB
NOT TO SCALE

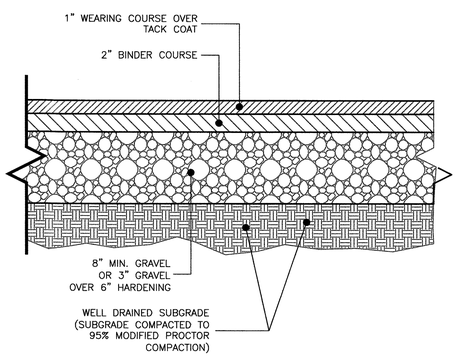

2 PAVEMENT SECTION
NOT TO SCALE

NOTE:
THIS PAVEMENT SECTION DETAIL REFLECTS MINIMUM REQUIREMENTS. ENGINEER TO DETERMINE DESIGN BASED ON GEOTECHNICAL DATA.

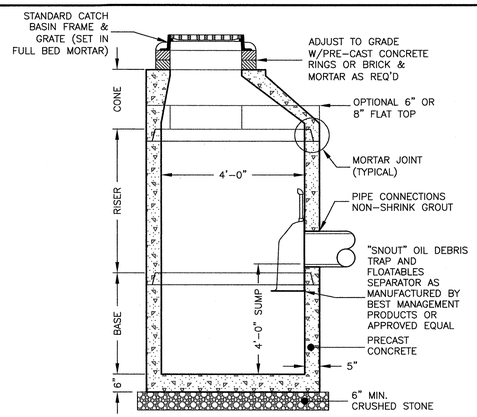

3 PRE-CAST CATCH BASIN
NOT TO SCALE

NOTES:
1. CONCRETE: 4,000 PSI MINIMUM AFTER 28 DAYS.
2. REINFORCED STEEL CONFORMS TO LATEST ASTM A185 SPEC. 0.12 SQ. IN./LINEAL FT. AND 0.12 SQ. IN. (BOTH WAYS) BASE BOTTOM.
3. H-20 DESIGN LOADING PER AASHTO HS-20-44; ASTM C478 SPEC FOR "PRECAST REINFORCED CONCRETE MANHOLE SECTIONS."

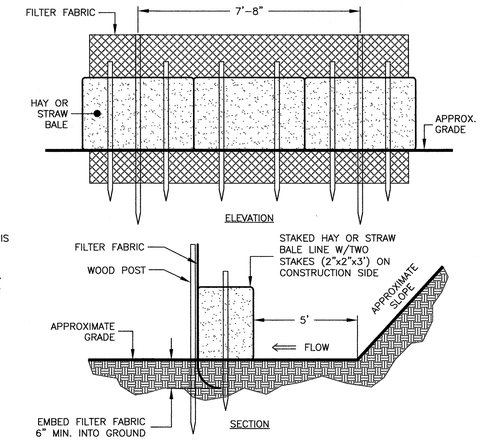

4 SILT FENCE & HAY/STRAW BALE
NOT TO SCALE

NOTE:
USE STRAW BALES ADJACENT TO WETLANDS

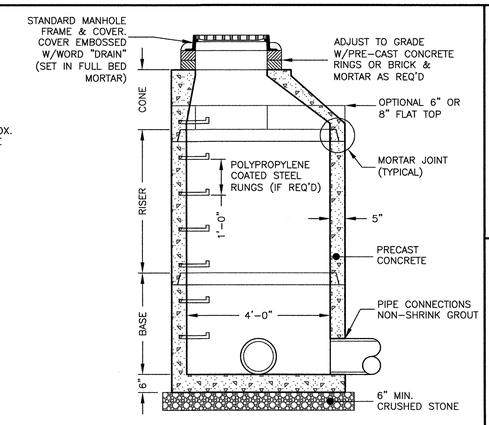

PRE-CAST DRAIN MANHOLE
NOT TO SCALE

NOTES:
1. CONCRETE: 4,000 PSI MINIMUM AFTER 28 DAYS.
2. REINFORCED STEEL CONFORMS TO LATEST ASTM A185 SPEC. 0.12 SQ. IN./LINEAL FT. AND 0.12 SQ. IN. (BOTH WAYS) BASE BOTTOM.
3. H-20 DESIGN LOADING PER AASHTO HS-20-44; ASTM C478 SPEC FOR "PRECAST REINFORCED CONCRETE MANHOLE SECTIONS."

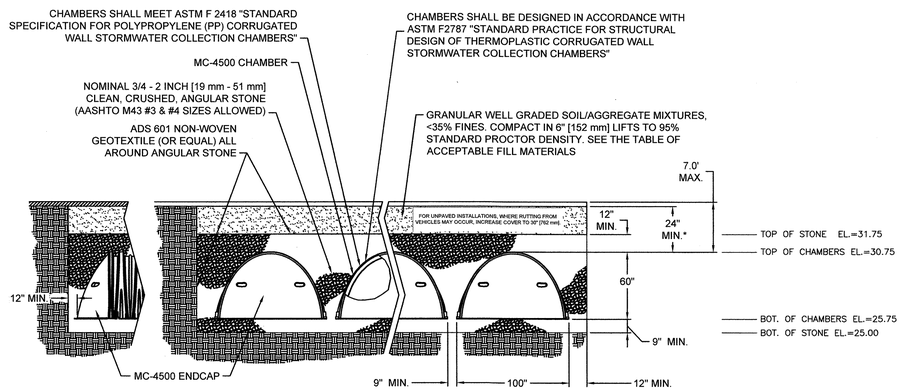

PERIMETER STONE MUST ALWAYS BE BROUGHT UP EVENLY WITH BACKFILL OF BED. PERIMETER STONE MUST EXTEND HORIZONTALLY TO THE EXCAVATION WALL FOR BOTH STRAIGHT OR SLOPED SIDEWALLS.

5 MC-4500 TYPICAL CROSS-SECTION
NOT TO SCALE

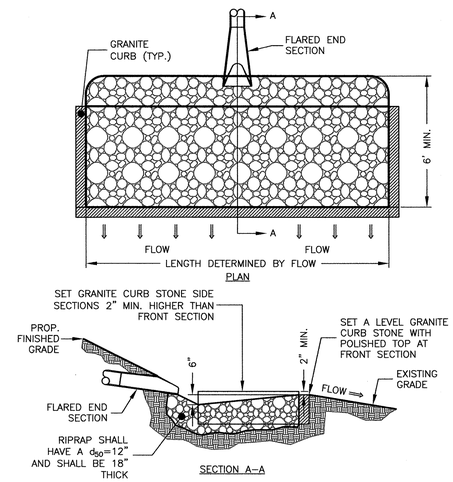

6 LEVEL SPREADER
NOT TO SCALE

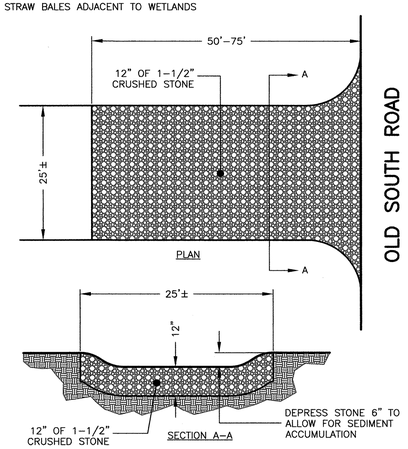

7 TIRE TRACKING PAD
NOT TO SCALE

NOTE:
PROVIDE TRANSITION BETWEEN CONSTRUCTION ENTRANCE AND PUBLIC RIGHT-OF-WAY. THE ENTRANCE SHALL BE MAINTAINED IN A CONDITION THAT WILL PREVENT THE TRACKING OF SEDIMENT INTO PUBLIC RIGHT-OF-WAY

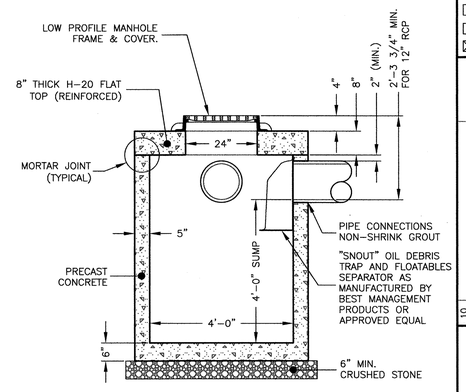

8 REDUCED COVER CATCH BASIN
NOT TO SCALE

NOTES:
1. CONCRETE: 4,000 PSI MINIMUM AFTER 28 DAYS.
2. REINFORCED STEEL CONFORMS TO LATEST ASTM A185 SPEC. 0.12 SQ. IN./LINEAL FT. AND 0.12 SQ. IN. (BOTH WAYS) BASE BOTTOM.
3. H-20 DESIGN LOADING PER AASHTO HS-20-44; ASTM C478 SPEC FOR "PRECAST REINFORCED CONCRETE MANHOLE SECTIONS."

NOTES:
1. INSPECTION PORTS MAY BE CONNECTED THROUGH ANY OF (6) CHAMBER CORRUGATION VALLEYS
2. ALL SCHEDULE 40 FITTINGS TO BE SOLVENT CEMENTED.

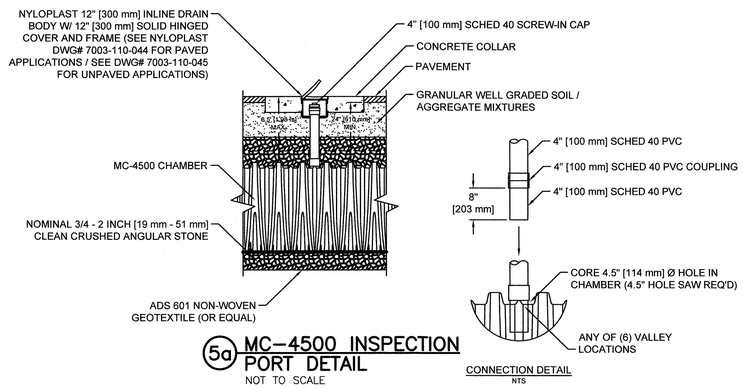

5a MC-4500 INSPECTION PORT DETAIL
NOT TO SCALE

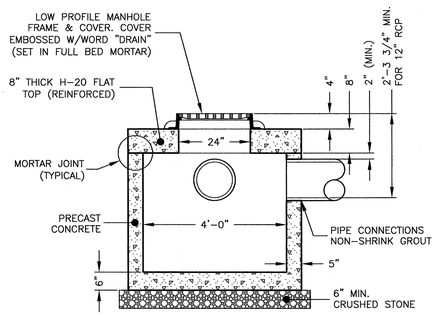

9 REDUCED COVER DRAIN MANHOLE
NOT TO SCALE

NOTES:
1. CONCRETE: 4,000 PSI MINIMUM AFTER 28 DAYS.
2. REINFORCED STEEL CONFORMS TO LATEST ASTM A185 SPEC. 0.12 SQ. IN./LINEAL FT. AND 0.12 SQ. IN. (BOTH WAYS) BASE BOTTOM.
3. H-20 DESIGN LOADING PER AASHTO HS-20-44; ASTM C478 SPEC FOR "PRECAST REINFORCED CONCRETE MANHOLE SECTIONS."

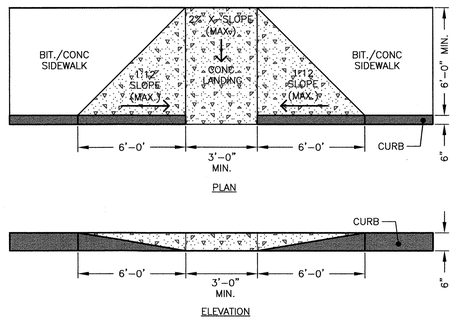

10 WHEELCHAIR RAMP
NOT TO SCALE

NOTE:
WHEELCHAIR RAMP SHALL COMPLY WITH ALL STATE AND FEDERAL RULES AND REGULATIONS.

1099CGD

APPROX. DRAIN AREA = 54.00 SQ IN
APPROX. WEIGHT = 8.36 LBS

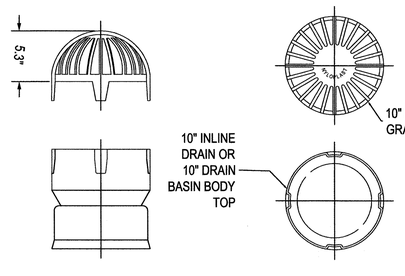

11 NYOPLAST YARD DRAIN INLET
NOT TO SCALE

Prepared For:

Owner / Applicant
RICHMOND GREAT POINT DEVELOPMENT, LLC
23 CONCORD STREET
WILMINGTON, MA 01887
(978) 988-3900

Prepared By:
Hayes Engineering, Inc.
603 Salem Street
Wakefield, MA 01880
Ph: 781 246 7600
Fax: 781 246 7596
www.hayeseng.com

Design By: EES
Drawn By: AMC
Checked By: PJO
Project File: NAN-0139
Comp. No: NAN66
☒ Issued For Permit
☐ Issued For Review
☐ Issued For Bid
☐ Issued For Construction
☒ Not For Construction

No.	Revision	Date
1		
2		
3		
4		
5		
6		
7		
8		
9		
10		

Scale: 1"=NTS

Date: June 10, 2016

Drawing Title:
OLD SOUTH ROAD CROSSING
DETAIL SHEET 1
OLD SOUTH ROAD
NANTUCKET, MASS.

Seal: COMMONWEALTH OF MASSACHUSETTS PETER J. OGREN CIVIL No. 27145 REGISTERED PROFESSIONAL ENGINEER 6/13/16

Drawing No.:
C6

SHEET 6 OF 8

N:\NAN66\SP_OSRliner_COMPILED.dwg, 6/13/2016 8:34:21 AM, TC

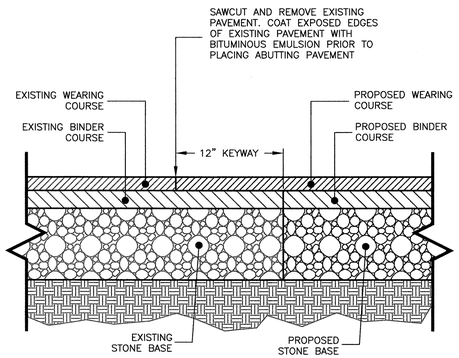

1 PAVEMENT KEYWAY
NOT TO SCALE

NOTE:
THIS PAVEMENT SECTION DETAIL REFLECTS MINIMUM REQUIREMENTS. ENGINEER TO DETERMINE DESIGN BASED ON GEOTECHNICAL DATA.

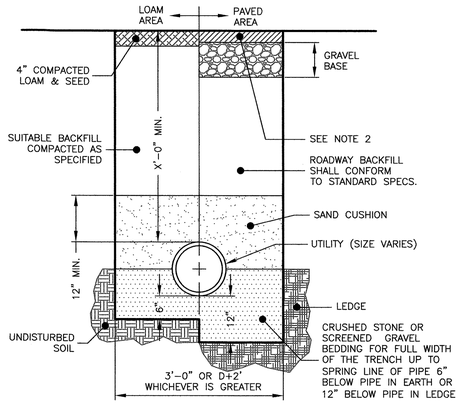

2 UTILITY TRENCH
NOT TO SCALE

NOTES:
1. ALL MATERIAL SHALL CONFORM TO CITY/TOWN OF DEPARTMENT OF PUBLIC WORKS.
2. NEW ROADWAY CONSTRUCTION SHALL CONFORM TO CITY/TOWN SPECIFICATIONS.
3. IN LIEU OF THE 12" GRAVEL COURSE AND 9" OF CRUSHED GRAVEL, 18" OF CRUSHED GRAVEL OR RECLAIMED STABILIZED BASE MAY BE USED AS A BASE FOR THE PAVEMENT REPAIR.
4. MATERIAL SHALL BE REPLACED IN KIND WHENEVER POSSIBLE.
5. A MINIMUM 2' CUTBACK IS REQUIRED AT THE TOP OF THE TRENCH WALL OVER UNDISTURBED MATERIAL.

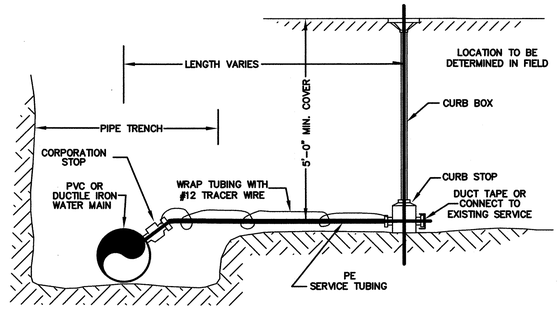

3 TYPICAL WATER SERVICE CONNECTION
NOT TO SCALE

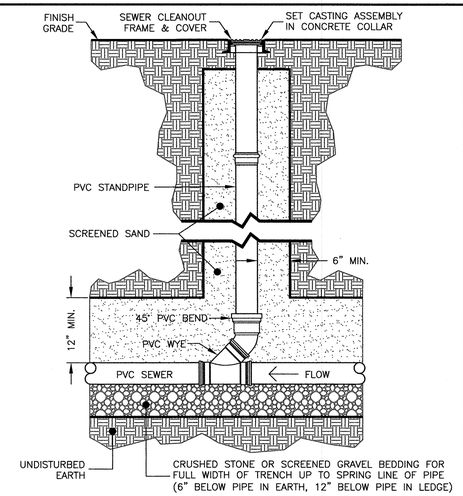

4 SEWER SERVICE CLEANOUT
NOT TO SCALE

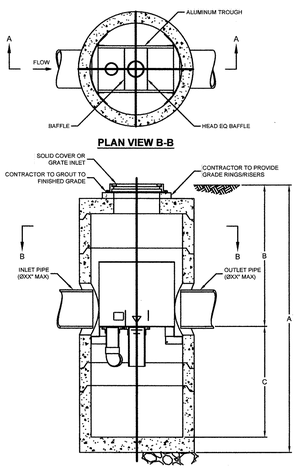

FRAME AND COVER
(DIAMETER VARIES)
N.T.S.

GENERAL NOTES
1. CONTECH TO PROVIDE ALL MATERIALS UNLESS NOTED OTHERWISE.
2. DIMENSIONS MARKED WITH [ ] ARE REFERENCE DIMENSIONS. ACTUAL DIMENSIONS MAY VARY.
3. FOR FABRICATION DRAWINGS WITH DETAILED STRUCTURE DIMENSIONS AND WEIGHT, PLEASE CONTACT YOUR CONTECH ENGINEERED SOLUTIONS LLC REPRESENTATIVE. www.ContechES.com
4. VORTSENTRY HS WATER QUALITY STRUCTURE SHALL BE IN ACCORDANCE WITH ALL DESIGN DATA AND INFORMATION CONTAINED IN THIS DRAWING.
5. STRUCTURE SHALL MEET AASHTO HS20 AND CASTINGS SHALL MEET AASHTO M306 LOAD RATING, ASSUMING GROUNDWATER ELEVATION AT, OR BELOW, THE OUTLET PIPE INVERT ELEVATION. ENGINEER OF RECORD TO CONFIRM ACTUAL GROUNDWATER ELEVATION.

INSTALLATION NOTES
1. ANY SUB-BASE, BACKFILL DEPTH, AND/OR ANTI-FLOTATION PROVISIONS ARE SITE-SPECIFIC DESIGN CONSIDERATIONS AND SHALL BE SPECIFIED BY ENGINEER OF RECORD.
2. CONTRACTOR TO PROVIDE EQUIPMENT WITH SUFFICIENT LIFTING AND REACH CAPACITY TO LIFT AND SET THE VORTSENTRY HS MANHOLE STRUCTURE (LIFTING CLUTCHES PROVIDED).
3. CONTRACTOR TO INSTALL JOINT SEALANT BETWEEN ALL STRUCTURE SECTIONS AND ASSEMBLE STRUCTURE.
4. CONTRACTOR TO PROVIDE, INSTALL, AND GROUT PIPES. MATCH PIPE INVERTS WITH ELEVATIONS SHOWN.
5. CONTRACTOR TO TAKE APPROPRIATE MEASURES TO ASSURE UNIT IS WATER TIGHT, HOLDING WATER TO FLOWLINE INVERT MINIMUM. IT IS SUGGESTED THAT ALL JOINTS BELOW PIPE INVERTS ARE GROUTED.

5 VORTSENTRY HS STANDARD DETAIL

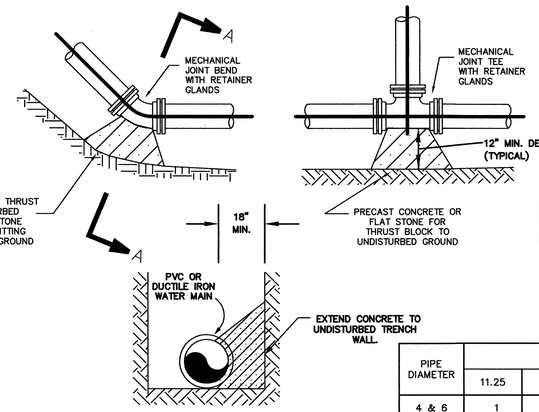

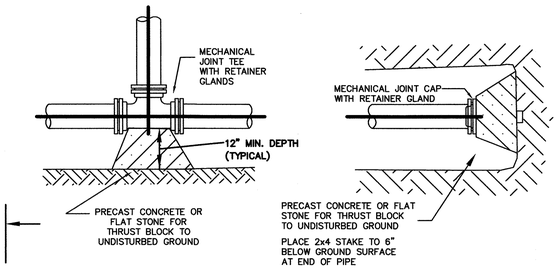

PIPE DIAMETER	BENDS				TEE
	11.25	22.5	45	90	
4 & 6	1	1	1	2	1.5
8	1	1	2	3	2.5
12	1	2	3.5	6.5	5

THRUST BLOCK BEARING AREA (SF)
(BASED UPON 100 psi WATER PRESSURE AND 3000 PSF BEARING LOAD CAPACITY)

6 TYPICAL THRUST BLOCK
NOT TO SCALE

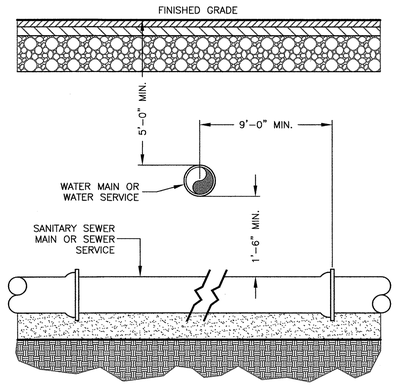

7 WATER/SEWER CROSSING
NOT TO SCALE

NOTES:
1. WHEREVER FEASIBLE, SEWERS WILL BE LAID AT A MINIMUM OF 10 FEET, HORIZONTALLY, FROM ANY EXISTING OR PROPOSED WATER MAIN. SHOULD LOCAL CONDITIONS PREVENT A LATERAL SEPARATION OF 10 FEET TO A WATER MAIN THE SEWER MAIN WILL BE LAID IN A SEPARATE TRENCH AND THE ELEVATION OF THE CROWN OF THE SEWER PLACED AT LEAST 18 INCHES BELOW THE INVERT OF THE WATER MAIN. WHENEVER SEWERS MUST CROSS UNDER WATER MAINS, THE SEWER SHALL BE LAID AT SUCH AN ELEVATION THAT THE CROWN OF THE SEWER IS AT LEAST 18 INCHES BELOW THE INVERT OF THE WATER MAIN. WHEN IT IS IMPOSSIBLE TO OBTAIN HORIZONTAL OR VERTICAL SEPARATION AS STIPULATED ABOVE, BOTH THE WATER MAIN AND SEWER SHOULD BE ENCASED IN CONCRETE FOR 10 FEET EITHER SIDE OF THE CROSSING.
2. IN LOCATIONS WHERE THE SEWER MAIN DOES NOT HAVE 48" OF COVER THE MAIN WILL BE INSULATED.

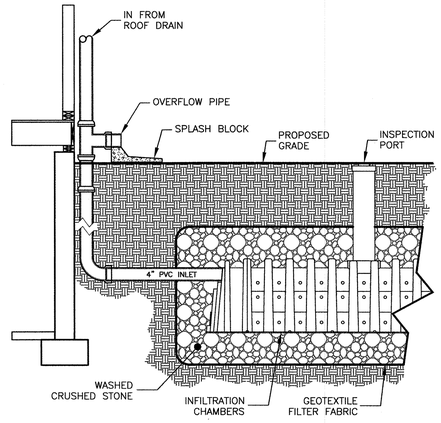

8 ROOF DRAIN TO CHAMBER
NOT TO SCALE

NOTE:
1. CULTECS SHALL BE INSTALLED A MINIMUM OF 10' FROM HOUSE.

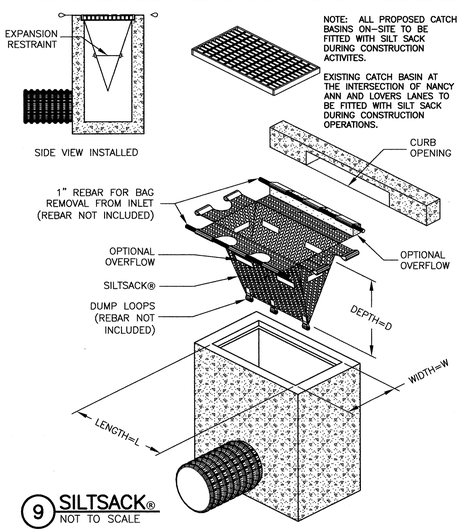

9 SILTSACK®
NOT TO SCALE

Prepared For:

Owner / Applicant
RICHMOND GREAT POINT DEVELOPMENT, LLC
23 CONCORD STREET
WILMINGTON, MA 01887
(978) 988-3900

Prepared By:
Hayes Engineering, Inc.
603 Salem Street
Wakefield, MA 01880
Phone: 781.246.0700
Fax: 781.246.7596
www.hayeseng.com

Design By:	EES
Drawn By:	AMC
Checked By:	PJO
Project File:	NAN-0139
Comp. No:	NAN66

☒ Issued For Permit
☐ Issued For Review
☐ Issued For Bid
☐ Issued For Construction
☒ Not For Construction

No.	Revision	Date
1		
2		
3		
4		
5		
6		
7		
8		
9		
10		

Scale: 1"=NTS

Date: June 10, 2016

Drawing Title:
OLD SOUTH ROAD CROSSING
INDEX PLAN
OLD SOUTH ROAD
NANTUCKET, MASS.

Seal: COMMONWEALTH OF MASSACHUSETTS PETER J. OGRENS No. 27... REGISTERED PROFESSIONAL ENGINEER 6/13/16

Drawing No.: C7

SHEET 7 OF 8

N:\NAN66\SP_OSRliner_COMPILED.dwg, 6/13/2016 8:34:26 AM, TC

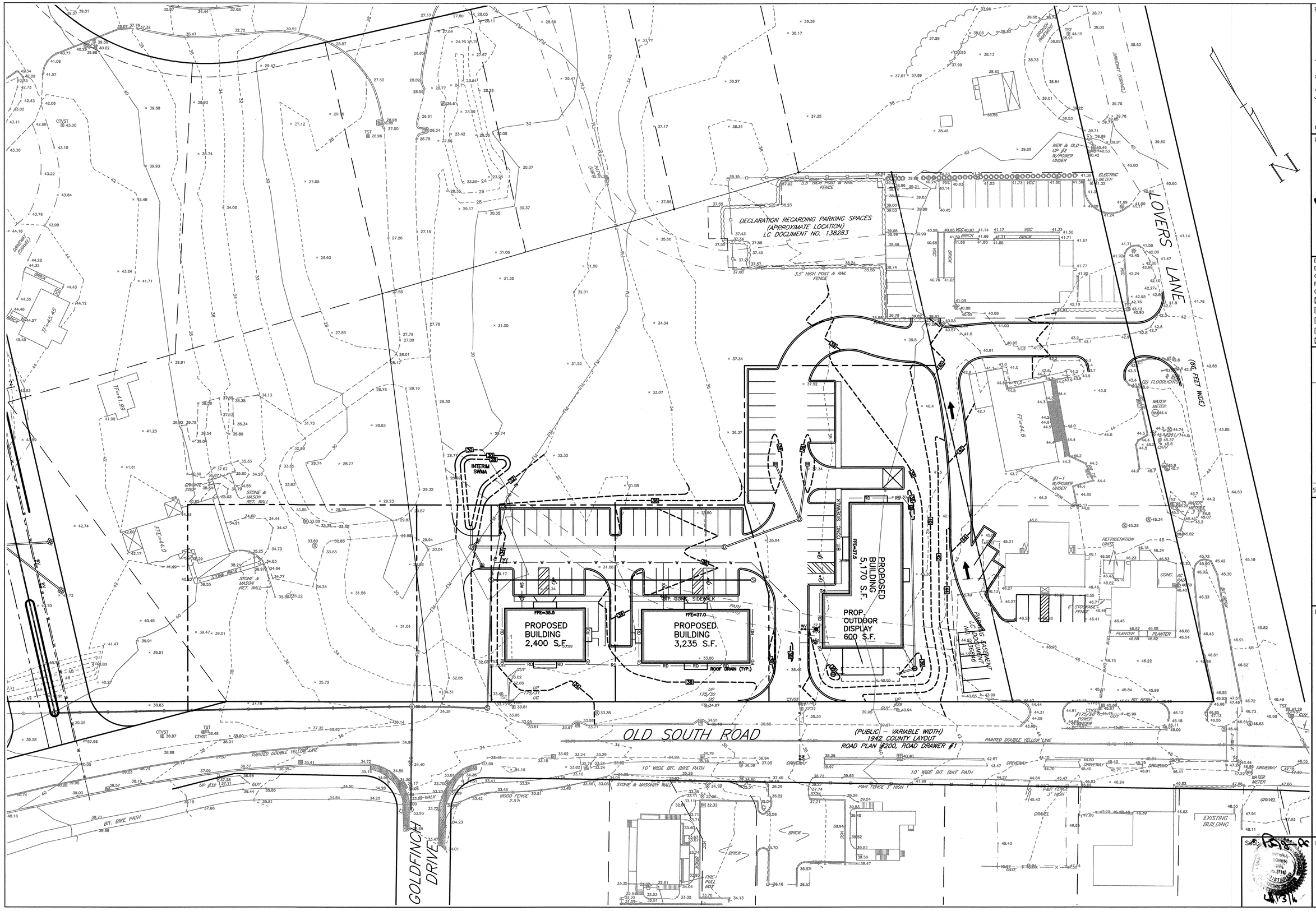

Prepared For:

Owner / Applicant

RICHMOND GREAT POINT DEVELOPMENT, LLC
23 CONCORD STREET
WILMINGTON, MA 01887
(978) 988-3900

Prepared By:

Hayes Engineering, Inc.
603 Salem Street
Wakefield, MA 01880
Ph: 781.246.2800
Fax: 781.246.7596
www.hayesengg.com

Design By: PJO
Drawn By: AMC
Checked By: PJO
Project File: NAN-0107T
Comp. No: NAN66

- ☒ Issued For Permit
- ☐ Issued For Review
- ☐ Issued For Bid
- ☐ Issued For Construction
- ☒ Not For Construction

No.	Revision	Date
1		
2		
3		
4		
5		
6		
7		
8		
9		
10		

Scale: 1" = 30'
0' 15' 30' 60'

Date: June 10, 2016

Drawing Title:

OLD SOUTH ROAD CROSSING
INTERIM SITE PLAN
OLD SOUTH ROAD
NANTUCKET, MASS.

Seal:

Drawing No.:

C8

SHEET 8 OF 8

N:\NAN66\SP_CSRliner_INTERIM.dwg, 6/13/2016 8:35:33 AM, TC

Hayes Engineering, Inc

603 Salem Street
Wakefield, MA 01880
Tel: (781) 246-2800
Fax: (781) 246-7596

Nantucket, MA 02554
Tel: (508) 228-7909

Refer to File No. NAN-0107J

Storm Water Management Report

Major Commercial Development
Special Permit Site Plan
Old South Road Crossing
Nantucket, Massachusetts

June 10, 2016

Table of Contents

1.0 Introduction 1
1.1 Pre-Development Conditions 1
1.2 Post-Development Conditions 2
1.3 Ground Cover Conditions 2
2.0 Storm Water Management 3
2.1 Pre-Development Conditions 3
2.1.1 Drainage System 3
2.1.2 Watersheds 3
2.1.3 Runoff Calculations 3
2.2 Post-Development Conditions 5
2.2.1 Drainage System 5
2.2.2 Watersheds 5
2.2.3 Runoff Calculations 7
3.0 Massachusetts DEP Storm Water Management Standards 9
3.1 Standard 1: No New Untreated Discharges 9
3.2 Standard 2: Peak Rate Attenuation 9
3.3 Standard 3: Recharge 10
3.4 Standard 4: Water Quality 11
3.5 Standard 5: Land Uses with Higher Potential Pollution Loads 12
3.6 Standard 6: Critical Areas 13
3.7 Standard 7: Redevelopment Projects 13
3.8 Standard 8: Construction Period Pollution Prevention 13
3.9 Standard 9: Operation and Maintenance Plan 14
3.10 Standard 10: Illicit Discharges 14
4.0 Conclusion 14

List of Tables

Table 1 - Ground Cover Conditions....2
Table 2 - Design Storms....5
Table 3 - Pre-Development Condition Peak Rates of Runoff....5
Table 4 - Pre-Development Condition Peak Volume of Runoff....5
Table 5 - Hydrologic Soil Properties by Soil Texture (Rawls, Brakensiek & Saxton, 1982)....8
Table 6 - Post-Development Peak Rate of Runoff....8
Table 7 - Post-Development Peak Volume of Runoff....8
Table 8 - Peak Rates of Runoff Comparison....10
Table 9 - Runoff Volume Comparison....10
Table 10 - Recharge Target Depth by Hydrologic Soil Group....11

List of Figures

Figure 1- USGS Vicinity Map....1
Figure 2 - Pre-Development Watershed Map....4
Figure 3 - Post-Development Watershed Map....6

List of Appendices

Appendix A: NRCS Soil Mapping and Data

Appendix B: HydroCAD® Calculations

Appendix C: Massachusetts DEP Storm Water Checklist

Appendix D: Water Quality Calculations

Appendix E: Construction Period Pollution Prevention Plan

Appendix F: Operations and Maintenance Plan

1.0 Introduction

Richmond Great Point Development, LLC (the "Applicant") propose to construct a multi-unit retail development to be known as "Old South Road Crossing" (the "Project") proximate to the intersection of Old South Road and Lovers Lane. The Project area is depicted on Figure 1 below showing a portion of the United States Geologic Survey (USGS) topographic map. The Project is a portion of a larger project including both residential and commercial uses; this larger project will include improvements to infrastructure through the relocation, improvement and reconfiguration of portions of Old South Road, Nancy Ann Drive, and Davkim Road.

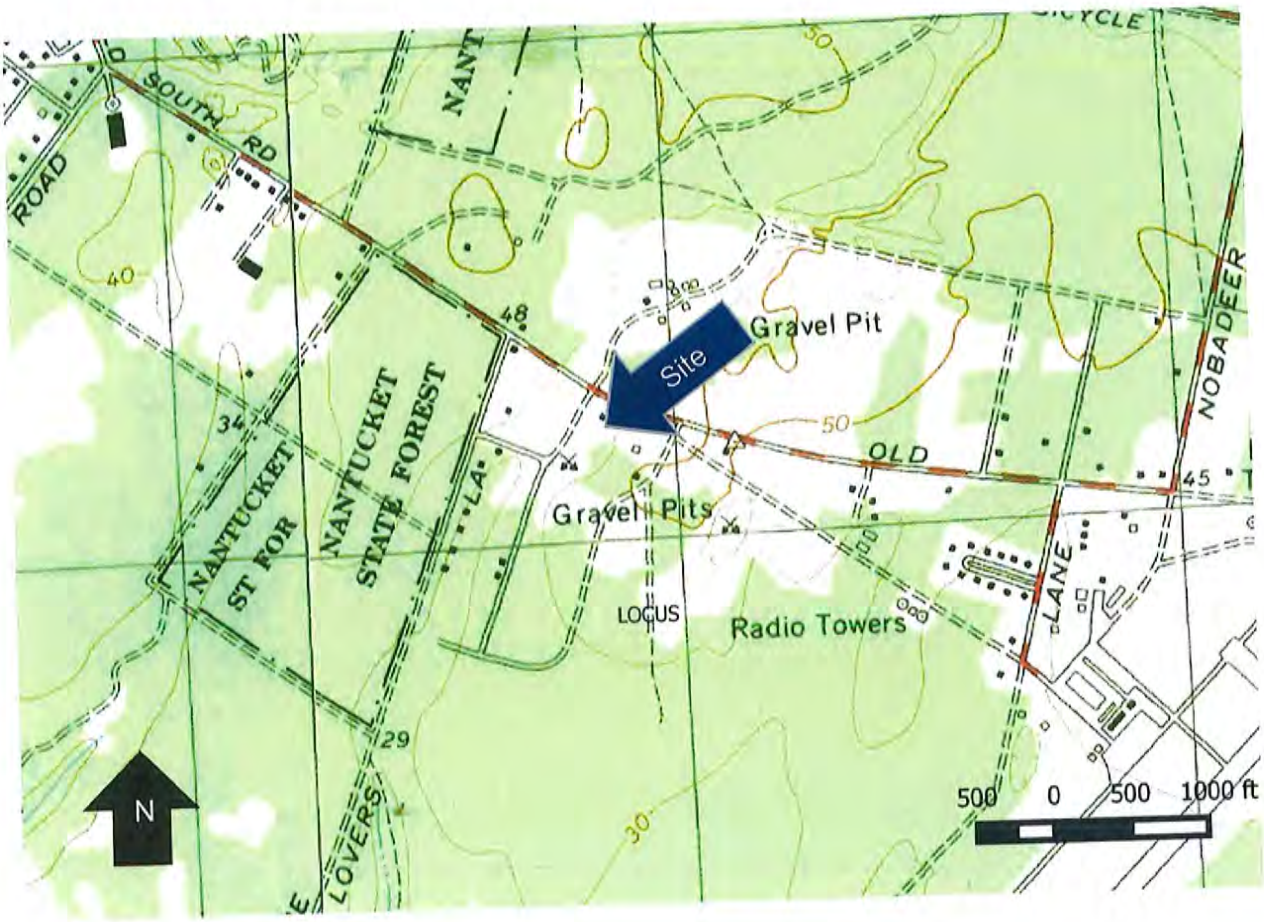

Figure 1- USGS Vicinity Map

1.1 Pre-Development Conditions

The Project site in its existing condition consists of developed and undeveloped areas near the intersection of Old South Road and Lovers Lane.

The United States Department of Agriculture Natural Resource Conservation Service (NRCS) Soil Survey mapping indicates soils representative of Evesboro sand within the Project area. This well drained soil exhibits deep ground water and is classified as Hydrologic Soil Group (HSG) "A."

The NRCS identifies the following characteristics of soils classified as Group A:

Soils having a high infiltration rate (low runoff potential) when thoroughly wet. These consist mainly of deep, well drained to excessively drained sands or gravelly sands. These soils have a high rate of water transmission.

NRCS Soil Survey Mapping and Soil Data accompany this report as Appendix A.

1.2 Post-Development Conditions

The Project as proposed includes the construction of a five (5) retail structures varying in size between 1,500 and 5,170 square feet, associated parking and driveways. A comprehensive storm water management and drainage system will also be constructed to capture, convey and treat runoff from the Project.

1.3 Ground Cover Conditions

The hydrologic study area consists of approximately 6.5± acres in land area. The following table summarizes the pre- and post-development ground cover conditions for the study area(s):

Table 1 - Ground Cover Conditions

Cover Type	Existing Area (Acres)	Proposed Area (Acres)	Change (Acres)
Impervious Surfaces	0.87	2.46	+1.59
Bare Soil	0.92	0.11	-0.81
Brush, Poor	2.00	0.00	-2.00
Meadow	0.64	0.00	-0.64
Grass, Good	2.06	4.17	+2.11
Total	**6.49**	**6.75**	**+0.26**

Note: HydroCAD® Calculations provided in Appendix B summarize cover conditions for each sub-catchment.

2.0 Storm Water Management

2.1 Pre-Development Conditions

2.1.1 Drainage System

The proposed site generates surface runoff conveyed by overland flow to the South via a broad valley that bisects the site. There is no structured drainage system in this area.

2.1.2 Watersheds

Under existing conditions, the site is divided into one (1) sub-catchment area. (See Figure 2 – Pre-Development Watershed Map).

The study point of comparison, Point of Comparison 1, is at the intersection of the above aforementioned valley and the downgradient property line of Lot 6.

Sub-catchment EX1 is tributary to Study Point of Comparison 1 (POC1). EX1 encompasses the Project area and consists of undeveloped meadow, areas of interspersed scrub oak and pines (brush) and areas of developed residential and commercial lands, buildings and driveways near the perimeter of the sub-catchment.

2.1.3 Runoff Calculations

Runoff calculations were performed in accordance with the methodology outlined in the NRCS Soil Conservation Service (SCS) methods as defined in Technical Release 55 (TR-55) and Technical Release 20 (TR-20) which are the basis for they HydroCAD® hydrologic model. Existing cover conditions and times of concentrations were used to generate runoff hydrographs for each of the three (3) sub-catchments in each of the Type III design storms in accordance with Technical Paper 40 (TP-40) as identified in Table 2.

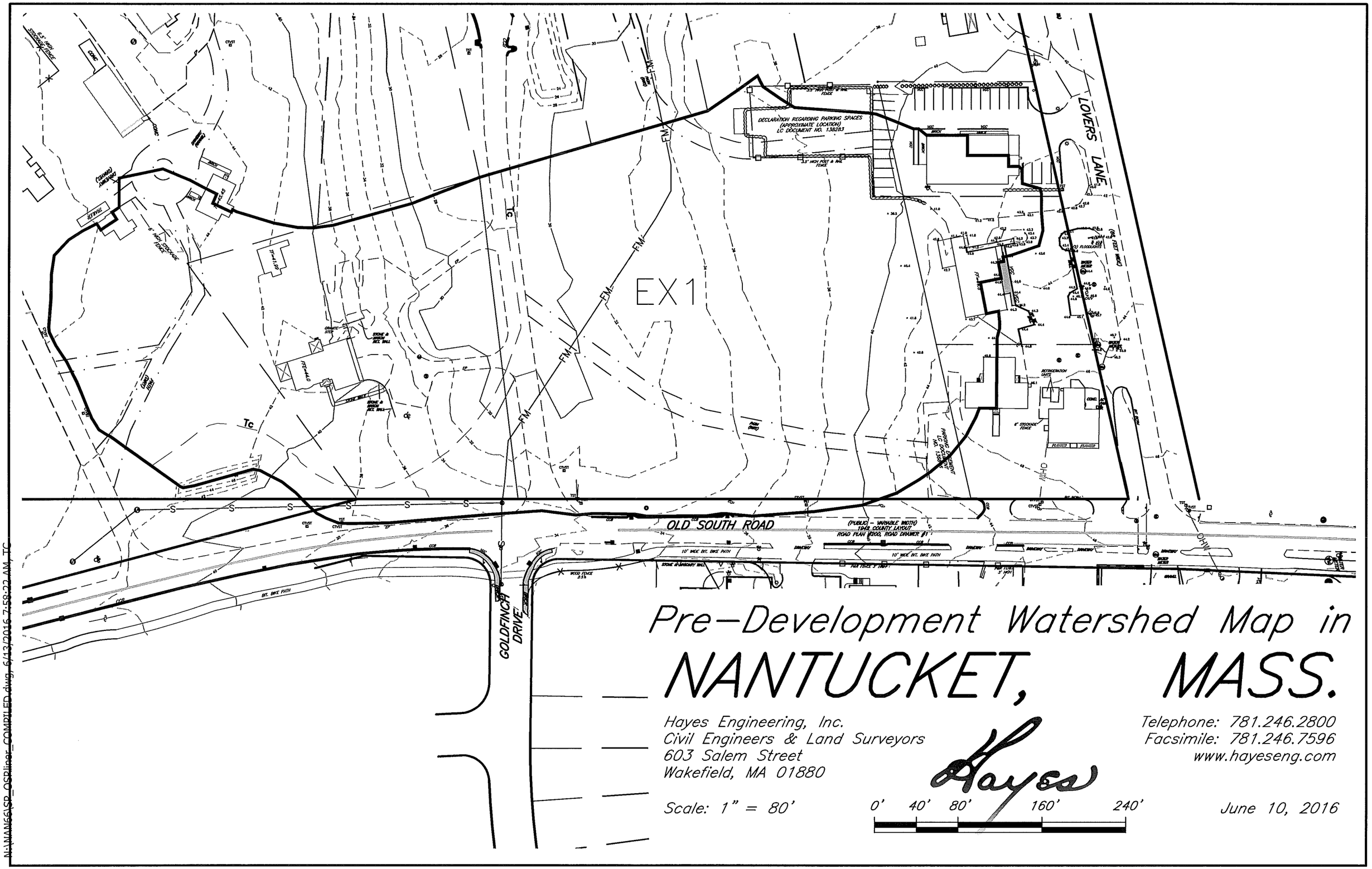

Pre-Development Watershed Map in NANTUCKET, MASS.

Hayes Engineering, Inc.
Civil Engineers & Land Surveyors
603 Salem Street
Wakefield, MA 01880

Telephone: 781.246.2800
Facsimile: 781.246.7596
www.hayeseng.com

Scale: 1" = 80'

0' 40' 80' 160' 240'

June 10, 2016

Table 2 - Design Storms

DESIGN STORM (RETURN FREQUENCY)	RAINFALL (INCHES/24-HOURS)
2-year	2.6
10-year	4.9
25-year	5.4
50-year	6.5
100-year	7.2

Pre-development peak rate and volumes of runoff to the Study Points of Comparison are shown in Table 3 and Table 3, below.

Table 3 - Pre-Development Condition Peak Rates of Runoff

Study Point	2-yr Storm Peak Flow (Q_p) (cfs)	10-yr Storm Peak Flow (Q_p) (cfs)	25-yr Storm Peak Flow (Q_p) (cfs)	50-yr Storm Peak Flow (Q_p) (cfs)	100-yr Storm Peak Flow (Q_p) (cfs)
POC1	0.9	3.2	5.4	7.4	9.5

Table 4 - Pre-Development Condition Peak Volume of Runoff

Study Point	2-yr Storm Peak Volume (V_p) (ac-ft.)	10-yr Storm Peak Volume (V_p) (ac-ft.)	25-yr Storm Peak Volume (V_p) (ac-ft.)	50-yr Storm Peak Volume (V_p) (ac-ft.)	100-yr Storm Peak Volume (V_p) (ac-ft.)
POC1	0.2	0.5	0.7	0.9	1.2

2.2 Post-Development Conditions

2.2.1 Drainage System

The proposed drainage system consists of swales, catch basins, manholes and culverts that direct runoff to treatment and infiltration best management practices (BMPs) on-site.

2.2.2 Watersheds

The Project as proposed divides the study area into six (6) sub-catchments that are ultimately tributary to the Study Point of Comparison (See Figure 3 – Post-Development Watershed Map). The Study Point of

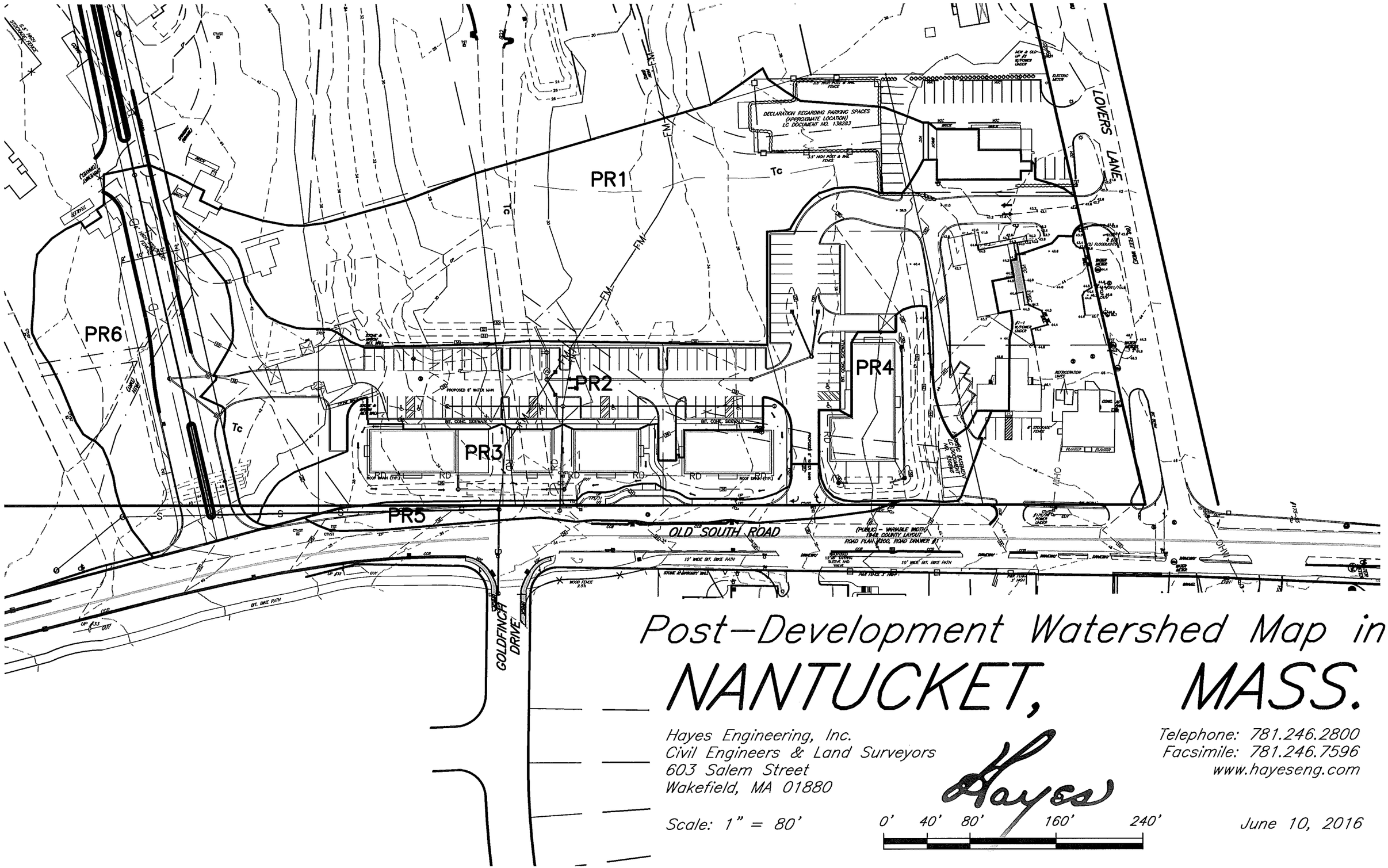

Post–Development Watershed Map in NANTUCKET, MASS.

Hayes Engineering, Inc.
Civil Engineers & Land Surveyors
603 Salem Street
Wakefield, MA 01880

Telephone: 781.246.2800
Facsimile: 781.246.7596
www.hayeseng.com

Scale: 1" = 80'

0' 40' 80' 160' 240'

June 10, 2016

Comparison and its respective sub-catchment areas are described below:

POC1 – Existing valley at the downgradient property boundary of Lot 6:

- Sub-catchment PR1 consists of the undeveloped portions of the project area to the south including the majority of Lot 6;
- Sub-Catchment PR2 consists of the parking and driveways associated with the Project;
- Sub-catchment PR3 consists of the rooftops and rear landscaped areas for the proposed retail buildings on lots 2 through 5.
- Sub-catchment PR4 consists of the rooftop and rear landscaped area for the proposed retail building on lots 4.
- Sub-catchments PR5 and PR6 are areas of the Project site that are to be modified by the infrastructure improvements proposed as part of the overall development plan of the area. Runoff from these sub-catchments will be addressed by the infrastructure servicing the new and/or modified roadways.

Sub-catchments PR2, PR3 and PR4 are collected and directed to Proposed Sub-Surface Infiltration Systems (PSISs).

- PSIS1 to be constructed under the proposed swale in sub-catchment PR3;
- PSIS2 to be constructed under the parking lot in sub-catchment PR2. Runoff in excess of the infiltration capacity of the PSIS will flow overland to Study Point of Comparison 1.; and
- PSIS3 to be constructed adjacent to the proposed building on Lot 1 in sub-catchment PR4.

2.2.3 Runoff Calculations

As in the pre-development condition, runoff calculations were performed in accordance with the methodology outlined in the NRCS Soil Conservation Service (SCS) methods as defined in Technical Release 55 (TR-55) and Technical Release 20 (TR-20) which are the basis for they HydroCAD® hydrologic model. Proposed cover conditions and times of concentrations were used to generate runoff hydrographs for each of the six (6) sub-catchments in each of the Type III design storms in accordance with Technical Paper 40 (TP-40) as identified in Table 2.

The developed runoff hydrographs were then flood routed through the proposed sub-surface infiltration systems factoring the respective infiltration rates for the corresponding soil types as identified in the Rawls Table of Infiltration Rates (see Table 5, below).

Table 5 - Hydrologic Soil Properties by Soil Texture (Rawls, Brakensiek & Saxton, 1982)

Texture Class	Effective Water Capacity (C_w) (inch per inch)	Minimum Infiltration Rate (*f*) (inches per hour)	Hydrologic Soil Group
Sand	0.35	8.27	A
Loamy Sand	0.31	2.41	A
Sandy Loam	0.25	1.02	A
Loam	0.19	0.52	B
Silt Loam	0.17	0.27	B
Sandy Clay Loam	0.14	0.17	C
Clay Loam	0.14	0.09	D
Silty Clay Loam	0.11	0.06	D
Sandy Clay	0.09	0.05	D
Silty Clay	0.09	0.04	D
Clay	0.08	0.02	D

Post-development peak rate and volumes of runoff to the Study Points of Comparison are shown in Table 6 and Table 7, below.

Table 6 - Post-Development Peak Rate of Runoff

Study Point	2-yr Storm Peak Flow (Q_p) (cfs)	10-yr Storm Peak Flow (Q_p) (cfs)	25-yr Storm Peak Flow (Q_p) (cfs)	50-yr Storm Peak Flow (Q_p) (cfs)	100-yr Storm Peak Flow (Q_p) (cfs)
POC1	0.0	0.6	3.7	6.1	8.8

Table 7 - Post-Development Peak Volume of Runoff

Study Point	2-yr Storm Runoff Volume (V_p) (ac-ft.)	10-yr Storm Runoff Volume (V_p) (ac-ft.)	25-yr Storm Runoff Volume (V_p) (ac-ft.)	50-yr Storm Runoff Volume (V_p) (ac-ft.)	100-yr Storm Runoff Volume (V_p) (ac-ft.)
POC1	0.0	0.1	0.2	0.4	0.5

2.2.4 Hydraulic Calculations

The closed drainage system piping was sized for the twenty-five (25) year storm using the peak flow rates calculated for the respective post-development sub-catchments tributary to each catch-basin and Manning's Equation for each section of pipe. Please refer to Appendix C for pipe sizing calculations for the project.

3.0 Massachusetts DEP Storm Water Management Standards

Although the proposed subdivision is not located within areas under jurisdiction the Massachusetts Department of Environmental Protection's (MaDEPs) Wetlands Protection Act (WPA), the proposed storm water management system has been designed to comply with the ten (10) standards of the MaDEP Storm Water Management Policy to the maximum extent practicable. Each of the standards and the extent of Project compliance are summarized below. Please refer to Appendix D for the completed MassDEP Storm Water Checklist.

3.1 Standard 1: No New Untreated Discharges

No new storm water conveyances (e.g. outfalls) may discharge untreated storm water directly to or cause erosion in wetlands or waters of the Commonwealth.

The Project does not discharge any storm water directly to a wetland or water of the Commonwealth. Storm water quality controls are proposed with the project including: deep-sump and hooded catch basins, and sub-surface infiltration areas.

3.2 Standard 2: Peak Rate Attenuation

Storm water management systems shall be designed so that post-development peak discharge rates do not exceed pre-development peak discharge rates.

Storm water management controls to mitigate peak rates of runoff from the Project were developed for the 2, 10, 25, 50 and 100-year, 24-hour design storm events. As previously stated, runoff calculations were performed in accordance with the methodology outlined in the NRCS Soil Conservation Service (SCS) methods as defined in Technical Release 55 (TR-55) and Technical Release 20 (TR-20) which are the basis for they HydroCAD® hydrologic model. Calculations are provided as Appendix B to this report.

Table 8 summarizes the pre- and post-development peak rates of runoff for the Project and Table 9 summarizes the pre- and post-development volumes of runoff for the Project

Table 8 - Peak Rates of Runoff Comparison

Study Point	2y Storm Q_p (cfs)			10y Storm Q_p (cfs)			25yStorm Q_p (cfs)			50y Storm Q_p (cfs)			100yStorm Q_p (cfs)		
	Pre	Post	Δ	Pre	Post	Δ	Pre	Post	Δ	Pre	Post	Δ	Pre	Post	Δ
POC1	0.9	0.0	-0.9	3.2	0.6	-2.7	5.4	3.7	-1.7	7.4	6.1	-1.3	9.5	8.5	-1.0

Table 9 - Runoff Volume Comparison

Study Point	2y Storm Runoff Volume (V_p) (ac-ft.)			10y Storm Runoff Volume (V_p) (ac-ft.)			25yStorm Runoff Volume (V_p) (ac-ft.)			50y Storm Runoff Volume (V_p) (ac-ft.)			100yStorm Runoff Volume (V_p) (ac-ft.)		
	Pre	Post	Δ	Pre	Post	Δ	Pre	Post	Δ	Pre	Post	Δ	Pre	Post	Δ
POC1	0.2	0.0	-0.2	0.5	0.1	-0.4	0.7	0.2	-0.5	0.9	0.4	-0.5	1.2	0.5	-0.7

3.3 Standard 3: Recharge

Loss of annual recharge to groundwater shall be eliminated or minimized through the use of infiltration ... At a minimum, the annual recharge from the post-development site shall approximate the annual recharge from pre-development conditions based on soil type. This Standard is met when the storm water management system is designed to infiltrate the required recharge volume as determined in accordance with the Massachusetts Storm Water Handbook.

The Project approximates the annual recharge to groundwater through the use of structural and non-structural best management practices (BMPs) including a sub-surface infiltration system and existing surface infiltration as well as through implementation of the proposed long-term operations and maintenance plan.

In accordance with the Massachusetts Storm Water Handbook the required recharge volume (R_v) for the Project equals a depth of runoff corresponding to the soil type time the impervious areas covering that soil type at the post-development site.

As previously stated and documented in Appendix A, soils on-site are best represented by hydrologic soil group A. The target depth factor (F) identified for hydrologic soil type A is identified as 0.6-inches in Table 2.3.2: Recharge Depth by Hydrologic Soil Group of the Massachusetts Storm Water Handbook (and included as Table 10, below).

Table 10 - Recharge Target Depth by Hydrologic Soil Group

NRCS HYDROLOGIC SOIL TYPE	APPROX. SOIL TEXTURE	TARGET DEPTH FACTOR (F)
A	sand	**0.6-inch**
B	loam	**0.35-inch**
C	silty loam	**0.25-inch**
D	clay	**0.1-inch**

The proposed increase in impervious area at the post-development site was listed previously as 1.59 acres in Table 1 of this report.

The required recharge volume (R_v) for the Project can be calculated as indicated below:

$$R_v = F \times Impervious\ Area$$

$$= (0.6\ inches)\left(\frac{1\ foot}{12\ inches}\right)(1.59\ acres)$$

$$= 0.08\ acre - feet = 3{,}485\ cubic\ feet$$

The Storm Water Handbook also requires that recharge facilities be constructed in soils capable of absorbing the recharge volume within 72 hours. Drawdown time (in hours) can be calculated as indicated below:

$$t_d = \frac{R_v}{(f)(A_b)}$$

Where,

t_d = Drawdown Time (hours)

R_v = Required Recharge Volume in cubic feet (Calculated above)

f = Rawls Infiltration Rate (See Table 3) in feet per hour

A_b = Bottom Area of Infiltration Systems in square feet

(from PSIS1-3, Appendix B)

$$t_d = \frac{3{,}485\ cf}{\left(\frac{8.27\ inches}{hour}\right)\left(\frac{1\ ft}{12\ inches}\right)(780 + 2{,}038 + 448\ sf)}$$

$$t_d = 1.5\ hours$$

The proposed sub-surface infiltration systems (PSIS1, PSIS2 and PSIS3) will infiltrate the required recharge volume in approximately 1.5 hours.

3.4 Standard 4: Water Quality

Stormwater management systems shall be designed to remove 80% of the average annual post-construction load of Total Suspended Solids (TSS). The standard is met with pollution prevention plans, storm water best management practices sized to capture the required water quality volume, and pretreatment measures.

Runoff generated by new impervious surfaces will be collected and, when required, treated with deep sump and hooded catch basins, a proprietary swirl particle separator (VortSentry HS) and then infiltrated to achieve a presumptive removal rate of 80%. TSS Removal Calculations and VortSentry sizing tables are included as Appendix D to this report.

Operations and maintenance plans for construction and post-development phases of the Project are included as Appendix E and Appendix F, respectively, to this report.

3.5 Standard 5: Land Uses with Higher Potential Pollution Loads

For land uses with higher potential pollutant loads, source control and pollution prevention shall be implemented in accordance with the Massachusetts Storm Water Handbook to eliminate or reduce the discharge of storm water runoff from such land uses to the maximum extent practicable. If through source control and/or pollution prevention all land uses with higher potential pollutant loads cannot be completely protected from exposure to rain, snow, snow melt, and storm water runoff, the proponent shall use the specific structural storm water BMPs determined by the Department to be suitable for such uses as provided in the Massachusetts Storm Water Handbook. Storm water discharges from land uses with higher potential pollutant loads shall also comply with the requirements of the Massachusetts Clean Waters Act, M.G.L. c. 21, §§ 26-53 and the regulations promulgated thereunder at 314 CMR 3.00, 314 CMR 4.00 and 314 CMR 5.00.

Standard 5 is not applicable to the Project. The Project is not associated with uses that will subject the site to higher potential pollutant loads as defined in the MaDEP Wetlands and Water Quality regulations.

Land Uses with Higher Potential Pollutant Loads (LUHPPLs) are identified in 310 CMR 22.20B(2) and C(2) a through k and m and in 310 CMR 22.21(2)(a) 1 through 8 and (b) 1 through 6; areas within a site that are the location of activities that are subject to an individual National Pollutant Discharge Elimination System (NPDES) permit or the NPRDE Multi-Sector General Permit; automotive fueling facilities, exterior fleet storage areas, exterior vehicle service and equipment cleaning areas; marinas and boatyards; parking lots with high-intensity use; confined disposal facilities and disposal sites.

3.6 Standard 6: Critical Areas

Storm water discharges within the Zone II or Interim Wellhead Protection Area of a public water supply, and storm water discharges near or to any other critical area, require the use of the specific source control and pollution prevention measures and the specific structural storm water best management practices determined by the Department to be suitable for managing discharges to such areas, as provided in the Massachusetts Storm Water Handbook.

The Project is located within the Zone II of the Town of Nantucket public water supply. As such, the Project uses structural and non-structural BMPs suitable for use within this critical area. Water calculations included in Appendix E are based upon more stringent standards for critical areas that include:

- One-inch of run-off over impervious surfaces to calculate the Required Water Quality Volume
- Achieving a minimum of 44-percent TSS removal prior to discharge into infiltration BMPs.

3.7 Standard 7: Redevelopment Projects

A redevelopment project is required to meet the following Storm Water Management Standards only to the maximum extent practicable: Standard 2, Standard 3, and the pretreatment and structural best management practice requirements of Standards 4, 5, and 6. Existing storm water discharges shall comply with Standard 1 only to the maximum extent practicable. A redevelopment project shall also comply with all other requirements of the Storm Water Management Standards and improve existing conditions.

Standard 7 is not applicable to the Project. The MaDEP Storm Water Management Handbook definition of a redevelopment project identifies the, *"development, rehabilitation, expansion, and phased projects on previously developed sites, provided the redevelopment results in no net increase in impervious area."*

3.8 Standard 8: Construction Period Pollution Prevention

A plan to control construction-related impacts, including erosion sedimentation and other pollutant sources during construction and land disturbance activities (construction period erosion, sedimentation, and pollution prevention plan), must be developed and implemented.

A Construction Period Pollution Prevention and Erosion Control Plan is included as Appendix F to this report. This program details the construction period operation and maintenance for best management practices employed on the project and provides sequencing for pollution prevention measures and erosion and sedimentation controls. Locations of erosion control measures are depicted on the Definitive Plan set.

3.9 Standard 9: Operation and Maintenance Plan

A long-term operation and maintenance plan must be developed and implemented to ensure that storm water management systems function as designed.

A Long Term Operation and Maintenance Plan is included as Appendix G to this report. The Operation and Maintenance program provides details and scheduled for routine and non-routine maintenance to the selected best management practices used in the Project.

3.10 Standard 10: Illicit Discharges

All illicit discharges to the storm water management system are prohibited.

Illicit discharges to the storm water management system are discharged that are not entirely comprised of storm water. Discharges to the storm water management system from the following activities or facilities are permissible:

- Firefighting
- Water Main Flushing
- Landscape Irrigation
- Uncontaminated Groundwater
- Potable Water Sources
- Foundation Drains
- Air Conditioning Condensation
- Footing Drains
- Individual Resident Car Washing
- Flows from Riparian Habitats and Wetlands
- Dechlorinated Water from Swimming Pools
- Water Used for Street Sweeping
- Water Used to Clean Residential Buildings (without detergents)

All other illicit discharges to the storm water management system are prohibited.

There are no known illicit discharges anticipated through the completion of this project. Post-construction prevention of illicit discharges is addressed in the Good Housekeeping Practices section of Appendix G.

4.0 Conclusion

The Project as proposed has been designed to address both the quality and quantity of storm water runoff from the site improvements. The Project is not subject to the MaDEP Storm Water Standards; however, it has been designed to meet or exceed each of the ten (10) standards to the maximum extent practicable.

APPENDIX A:

NRCS Soil Mapping and Data

Soil Map—Nantucket County, Massachusetts
(Old South Road Retail)

USDA Natural Resources Conservation Service

Web Soil Survey
National Cooperative Soil Survey

MAP LEGEND

Area of Interest (AOI)

- Area of Interest (AOI)

Soils

- Soil Map Unit Polygons
- Soil Map Unit Lines
- Soil Map Unit Points

Special Point Features

- Blowout
- Borrow Pit
- Clay Spot
- Closed Depression
- Gravel Pit
- Gravelly Spot
- Landfill
- Lava Flow
- Marsh or swamp
- Mine or Quarry
- Miscellaneous Water
- Perennial Water
- Rock Outcrop
- Saline Spot
- Sandy Spot
- Severely Eroded Spot
- Sinkhole
- Slide or Slip
- Sodic Spot
- Spoil Area
- Stony Spot
- Very Stony Spot
- Wet Spot
- Other
- Special Line Features

Water Features

- Streams and Canals

Transportation

- Rails
- Interstate Highways
- US Routes
- Major Roads
- Local Roads

Background

- Aerial Photography

MAP INFORMATION

The soil surveys that comprise your AOI were mapped at 1:20,000.

Warning: Soil Map may not be valid at this scale.

Enlargement of maps beyond the scale of mapping can cause misunderstanding of the detail of mapping and accuracy of soil line placement. The maps do not show the small areas of contrasting soils that could have been shown at a more detailed scale.

Please rely on the bar scale on each map sheet for map measurements.

Source of Map: Natural Resources Conservation Service
Web Soil Survey URL: http://websoilsurvey.nrcs.usda.gov
Coordinate System: Web Mercator (EPSG:3857)

Maps from the Web Soil Survey are based on the Web Mercator projection, which preserves direction and shape but distorts distance and area. A projection that preserves area, such as the Albers equal-area conic projection, should be used if more accurate calculations of distance or area are required.

This product is generated from the USDA-NRCS certified data as of the version date(s) listed below.

Soil Survey Area: Nantucket County, Massachusetts
Survey Area Data: Version 12, Sep 19, 2014

Soil map units are labeled (as space allows) for map scales 1:50,000 or larger.

Date(s) aerial images were photographed: Mar 30, 2011—Oct 8, 2011

The orthophoto or other base map on which the soil lines were compiled and digitized probably differs from the background imagery displayed on these maps. As a result, some minor shifting of map unit boundaries may be evident.

Map Unit Legend

Nantucket County, Massachusetts (MA019)			
Map Unit Symbol	**Map Unit Name**	**Acres in AOI**	**Percent of AOI**
180B	Chilmark sandy loam, 3 to 8 percent slopes	1.3	4.1%
294A	Evesboro sand, 0 to 3 percent slopes	18.7	61.9%
294B	Evesboro sand, 3 to 8 percent slopes	10.3	34.0%
Totals for Area of Interest		**30.3**	**100.0%**

Map Unit Description

The map units delineated on the detailed soil maps in a soil survey represent the soils or miscellaneous areas in the survey area. The map unit descriptions in this report, along with the maps, can be used to determine the composition and properties of a unit.

A map unit delineation on a soil map represents an area dominated by one or more major kinds of soil or miscellaneous areas. A map unit is identified and named according to the taxonomic classification of the dominant soils. Within a taxonomic class there are precisely defined limits for the properties of the soils. On the landscape, however, the soils are natural phenomena, and they have the characteristic variability of all natural phenomena. Thus, the range of some observed properties may extend beyond the limits defined for a taxonomic class. Areas of soils of a single taxonomic class rarely, if ever, can be mapped without including areas of other taxonomic classes. Consequently, every map unit is made up of the soils or miscellaneous areas for which it is named and some minor components that belong to taxonomic classes other than those of the major soils.

Most minor soils have properties similar to those of the dominant soil or soils in the map unit, and thus they do not affect use and management. These are called noncontrasting, or similar, components. They may or may not be mentioned in a particular map unit description. Other minor components, however, have properties and behavioral characteristics divergent enough to affect use or to require different management. These are called contrasting, or dissimilar, components. They generally are in small areas and could not be mapped separately because of the scale used. Some small areas of strongly contrasting soils or miscellaneous areas are identified by a special symbol on the maps. If included in the database for a given area, the contrasting minor components are identified in the map unit descriptions along with some characteristics of each. A few areas of minor components may not have been observed, and consequently they are not mentioned in the descriptions, especially where the pattern was so complex that it was impractical to make enough observations to identify all the soils and miscellaneous areas on the landscape.

The presence of minor components in a map unit in no way diminishes the usefulness or accuracy of the data. The objective of mapping is not to delineate pure taxonomic classes but rather to separate the landscape into landforms or landform segments that have similar use and management requirements. The delineation of such segments on the map provides sufficient information for the development of resource plans. If intensive use of small areas is planned, however, onsite investigation is needed to define and locate the soils and miscellaneous areas.

An identifying symbol precedes the map unit name in the map unit descriptions. Each description includes general facts about the unit and gives important soil properties and qualities.

Soils that have profiles that are almost alike make up a *soil series*. All the soils of a series have major horizons that are similar in composition, thickness, and arrangement. Soils of a given series can differ in texture of the surface layer, slope, stoniness, salinity, degree of erosion, and other characteristics that affect their use. On the basis of such differences, a soil series is divided into *soil phases*. Most of the areas shown on the detailed soil maps are phases of soil series. The name of a soil phase commonly indicates a feature that affects use or management. For example, Alpha silt loam, 0 to 2 percent slopes, is a phase of the Alpha series.

Some map units are made up of two or more major soils or miscellaneous areas. These map units are complexes, associations, or undifferentiated groups.

A *complex* consists of two or more soils or miscellaneous areas in such an intricate pattern or in such small areas that they cannot be shown separately on the maps. The pattern and proportion of the soils or miscellaneous areas are somewhat similar in all areas. Alpha-Beta complex, 0 to 6 percent slopes, is an example.

An *association* is made up of two or more geographically associated soils or miscellaneous areas that are shown as one unit on the maps. Because of present or anticipated uses of the map units in the survey area, it was not considered practical or necessary to map the soils or miscellaneous areas separately. The pattern and relative proportion of the soils or miscellaneous areas are somewhat similar. Alpha-Beta association, 0 to 2 percent slopes, is an example.

An *undifferentiated group* is made up of two or more soils or miscellaneous areas that could be mapped individually but are mapped as one unit because similar interpretations can be made for use and management. The pattern and proportion of the soils or miscellaneous areas in a mapped area are not uniform. An area can be made up of only one of the major soils or miscellaneous areas, or it can be made up of all of them. Alpha and Beta soils, 0 to 2 percent slopes, is an example.

Some surveys include *miscellaneous areas*. Such areas have little or no soil material and support little or no vegetation. Rock outcrop is an example.

Additional information about the map units described in this report is available in other soil reports, which give properties of the soils and the limitations, capabilities, and potentials for many uses. Also, the narratives that accompany the soil reports define some of the properties included in the map unit descriptions.

Report—Map Unit Description

Nantucket County, Massachusetts

180B—Chilmark sandy loam, 3 to 8 percent slopes

Map Unit Setting

National map unit symbol: 996s
Mean annual precipitation: 41 to 48 inches
Mean annual air temperature: 50 to 54 degrees F
Frost-free period: 175 to 240 days
Farmland classification: All areas are prime farmland

Map Unit Composition

Chilmark and similar soils: 85 percent
Minor components: 15 percent
Estimates are based on observations, descriptions, and transects of the mapunit.

Description of Chilmark

Setting

Landform: Moraines
Landform position (two-dimensional): Shoulder
Landform position (three-dimensional): Side slope
Down-slope shape: Convex
Across-slope shape: Convex
Parent material: Friable coarse-loamy eolian deposits over dense fine-loamy lodgment till derived from granite and gneiss

Typical profile

H1 - 0 to 10 inches: sandy loam
H2 - 10 to 31 inches: sandy loam
H3 - 31 to 60 inches: stratified sandy clay loam to clay

Properties and qualities

Slope: 3 to 8 percent
Depth to restrictive feature: More than 80 inches
Natural drainage class: Well drained
Runoff class: High
Capacity of the most limiting layer to transmit water (Ksat): Moderately low to moderately high (0.06 to 0.20 in/hr)
Depth to water table: More than 80 inches
Frequency of flooding: None
Frequency of ponding: None
Available water storage in profile: Moderate (about 8.5 inches)

Interpretive groups

Land capability classification (irrigated): None specified
Land capability classification (nonirrigated): 2e
Hydrologic Soil Group: C

Minor Components

Nantucket

Percent of map unit: 4 percent

Plymouth

Percent of map unit: 4 percent

Evesboro

Percent of map unit: 4 percent

Woodbridge variant

Percent of map unit: 3 percent

294A—Evesboro sand, 0 to 3 percent slopes

Map Unit Setting

National map unit symbol: 996v
Elevation: 10 to 450 feet
Mean annual precipitation: 41 to 48 inches
Mean annual air temperature: 50 to 54 degrees F
Frost-free period: 175 to 240 days
Farmland classification: Farmland of statewide importance

Map Unit Composition

Evesboro and similar soils: 85 percent
Minor components: 15 percent
Estimates are based on observations, descriptions, and transects of the mapunit.

Description of Evesboro

Setting

Landform: Outwash plains
Landform position (two-dimensional): Summit
Landform position (three-dimensional): Tread
Down-slope shape: Convex
Across-slope shape: Convex
Parent material: Loose sandy glaciofluvial deposits

Typical profile

H1 - 0 to 6 inches: sand
H2 - 6 to 20 inches: loamy sand
H3 - 20 to 60 inches: stratified sand to sandy loam

Properties and qualities

Slope: 0 to 3 percent
Depth to restrictive feature: More than 80 inches
Natural drainage class: Excessively drained
Runoff class: Very low
Capacity of the most limiting layer to transmit water (Ksat): High to very high (2.00 to 20.00 in/hr)
Depth to water table: More than 80 inches
Frequency of flooding: None
Frequency of ponding: None
Available water storage in profile: Low (about 4.6 inches)

Interpretive groups

Land capability classification (irrigated): None specified
Land capability classification (nonirrigated): 7s
Hydrologic Soil Group: A

Minor Components

Udipsamments

Percent of map unit: 5 percent

Klej
Percent of map unit: 5 percent

Riverhead
Percent of map unit: 3 percent

Katama
Percent of map unit: 2 percent

294B—Evesboro sand, 3 to 8 percent slopes

Map Unit Setting

National map unit symbol: 996w
Elevation: 10 to 450 feet
Mean annual precipitation: 41 to 48 inches
Mean annual air temperature: 50 to 54 degrees F
Frost-free period: 175 to 240 days
Farmland classification: Farmland of statewide importance

Map Unit Composition

Evesboro and similar soils: 85 percent
Minor components: 15 percent
Estimates are based on observations, descriptions, and transects of the mapunit.

Description of Evesboro

Setting

Landform: Outwash plains
Landform position (two-dimensional): Shoulder
Landform position (three-dimensional): Riser
Down-slope shape: Convex
Across-slope shape: Convex
Parent material: Loose sandy glaciofluvial deposits

Typical profile

H1 - 0 to 6 inches: sand
H2 - 6 to 26 inches: loamy sand
H3 - 26 to 60 inches: stratified sand to sandy loam

Properties and qualities

Slope: 3 to 8 percent
Depth to restrictive feature: More than 80 inches
Natural drainage class: Excessively drained
Runoff class: Low
Capacity of the most limiting layer to transmit water (Ksat): High to very high (2.00 to 20.00 in/hr)
Depth to water table: More than 80 inches
Frequency of flooding: None
Frequency of ponding: None
Available water storage in profile: Low (about 4.5 inches)

Interpretive groups

Land capability classification (irrigated): None specified
Land capability classification (nonirrigated): 7s
Hydrologic Soil Group: A

Minor Components

Riverhead

Percent of map unit: 5 percent

Klej

Percent of map unit: 5 percent

Udipsamments

Percent of map unit: 5 percent

Data Source Information

Soil Survey Area: Nantucket County, Massachusetts
Survey Area Data: Version 12, Sep 19, 2014

Engineering Properties

This table gives the engineering classifications and the range of engineering properties for the layers of each soil in the survey area.

Hydrologic soil group is a group of soils having similar runoff potential under similar storm and cover conditions. The criteria for determining Hydrologic soil group is found in the National Engineering Handbook, Chapter 7 issued May 2007(http://directives.sc.egov.usda.gov/OpenNonWebContent.aspx?content=17757.wba). Listing HSGs by soil map unit component and not by soil series is a new concept for the engineers. Past engineering references contained lists of HSGs by soil series. Soil series are continually being defined and redefined, and the list of soil series names changes so frequently as to make the task of maintaining a single national list virtually impossible. Therefore, the criteria is now used to calculate the HSG using the component soil properties and no such national series lists will be maintained. All such references are obsolete and their use should be discontinued. Soil properties that influence runoff potential are those that influence the minimum rate of infiltration for a bare soil after prolonged wetting and when not frozen. These properties are depth to a seasonal high water table, saturated hydraulic conductivity after prolonged wetting, and depth to a layer with a very slow water transmission rate. Changes in soil properties caused by land management or climate changes also cause the hydrologic soil group to change. The influence of ground cover is treated independently. There are four hydrologic soil groups, A, B, C, and D, and three dual groups, A/D, B/D, and C/D. In the dual groups, the first letter is for drained areas and the second letter is for undrained areas.

The four hydrologic soil groups are described in the following paragraphs:

Group A. Soils having a high infiltration rate (low runoff potential) when thoroughly wet. These consist mainly of deep, well drained to excessively drained sands or gravelly sands. These soils have a high rate of water transmission.

Group B. Soils having a moderate infiltration rate when thoroughly wet. These consist chiefly of moderately deep or deep, moderately well drained or well drained soils that have moderately fine texture to moderately coarse texture. These soils have a moderate rate of water transmission.

Group C. Soils having a slow infiltration rate when thoroughly wet. These consist chiefly of soils having a layer that impedes the downward movement of water or soils of moderately fine texture or fine texture. These soils have a slow rate of water transmission.

Group D. Soils having a very slow infiltration rate (high runoff potential) when thoroughly wet. These consist chiefly of clays that have a high shrink-swell potential, soils that have a high water table, soils that have a claypan or clay layer at or near the surface, and soils that are shallow over nearly impervious material. These soils have a very slow rate of water transmission.

Depth to the upper and lower boundaries of each layer is indicated.

Texture is given in the standard terms used by the U.S. Department of Agriculture. These terms are defined according to percentages of sand, silt, and clay in the fraction of the soil that is less than 2 millimeters in diameter. "Loam," for example, is soil that is 7 to 27 percent clay, 28 to 50 percent silt, and less than 52 percent sand. If the content of particles coarser than sand is 15 percent or more, an appropriate modifier is added, for example, "gravelly."

Classification of the soils is determined according to the Unified soil classification system (ASTM, 2005) and the system adopted by the American Association of State Highway and Transportation Officials (AASHTO, 2004).

The Unified system classifies soils according to properties that affect their use as construction material. Soils are classified according to particle-size distribution of the fraction less than 3 inches in diameter and according to plasticity index, liquid limit, and organic matter content. Sandy and gravelly soils are identified as GW, GP, GM, GC, SW, SP, SM, and SC; silty and clayey soils as ML, CL, OL, MH, CH, and OH; and highly organic soils as PT. Soils exhibiting engineering properties of two groups can have a dual classification, for example, CL-ML.

The AASHTO system classifies soils according to those properties that affect roadway construction and maintenance. In this system, the fraction of a mineral soil that is less than 3 inches in diameter is classified in one of seven groups from A-1 through A-7 on the basis of particle-size distribution, liquid limit, and plasticity index. Soils in group A-1 are coarse grained and low in content of fines (silt and clay). At the other extreme, soils in group A-7 are fine grained. Highly organic soils are classified in group A-8 on the basis of visual inspection.

If laboratory data are available, the A-1, A-2, and A-7 groups are further classified as A-1-a, A-1-b, A-2-4, A-2-5, A-2-6, A-2-7, A-7-5, or A-7-6. As an additional refinement, the suitability of a soil as subgrade material can be indicated by a group index number. Group index numbers range from 0 for the best subgrade material to 20 or higher for the poorest.

Rock fragments larger than 10 inches in diameter and 3 to 10 inches in diameter are indicated as a percentage of the total soil on a dry-weight basis. The percentages are estimates determined mainly by converting volume percentage in the field to weight percentage.

Percentage (of soil particles) passing designated sieves is the percentage of the soil fraction less than 3 inches in diameter based on an ovendry weight. The sieves, numbers 4, 10, 40, and 200 (USA Standard Series), have openings of 4.76, 2.00, 0.420, and 0.074 millimeters, respectively. Estimates are based on laboratory tests of soils sampled in the survey area and in nearby areas and on estimates made in the field.

Liquid limit and *plasticity index* (Atterberg limits) indicate the plasticity characteristics of a soil. The estimates are based on test data from the survey area or from nearby areas and on field examination.

References:

American Association of State Highway and Transportation Officials (AASHTO). 2004. Standard specifications for transportation materials and methods of sampling and testing. 24th edition.

American Society for Testing and Materials (ASTM). 2005. Standard classification of soils for engineering purposes. ASTM Standard D2487-00.

Report—Engineering Properties

Absence of an entry indicates that the data were not estimated. The asterisk '*' denotes the representative texture; other possible textures follow the dash. The criteria for determining the hydrologic soil group for individual soil components is found in the National Engineering Handbook, Chapter 7 issued May 2007(http://directives.sc.egov.usda.gov/OpenNonWebContent.aspx?content=17757.wba).

Engineering Properties–Nantucket County, Massachusetts

Map unit symbol and soil name	Pct. of map unit	Hydrologic group	Depth	USDA texture	Classification		Fragments		Percentage passing sieve number—				Liquid limit	Plasticity index
					Unified	AASHTO	>10 inches	3-10 inches	4	10	40	200		
			In				Pct	Pct					Pct	
180B—Chilmark sandy loam, 3 to 8 percent slopes														
Chilmark	85	C	0-10	Sandy loam	ML, SM	A-1, A-2, A-4	0- 0- 0	0- 2- 3	95-98-100	90-95-100	45-65-85	15-35-55	—	NP
			10-31	Sandy loam	SM	A-1, A-2, A-4	0- 0- 0	0- 2- 3	95-98-100	90-95-100	45-60-75	15-28-40	—	NP
			31-60	Stratified sandy clay loam to clay	CL, CL-ML, ML	A-4	0- 0- 0	0- 2- 3	95-98-100	95-98-100	90-95-100	80-88-95	12-19-26	2-6 -10
294A—Evesboro sand, 0 to 3 percent slopes														
Evesboro	85	A	0-6	Sand	SP, SP-SM	A-1, A-2, A-3	0- 0- 0	0- 0- 0	90-95-100	85-93-100	40-65-90	0- 6- 12	10-13-15	NP-2 -3
			6-20	Loamy sand	SP, SP-SM	A-1, A-2, A-3	0- 0- 0	0- 0- 0	90-95-100	85-93-100	40-65-90	0- 6- 12	10-13-15	NP-2 -3
			20-60	Stratified sand to sandy loam	SC-SM, SM, SP, SP-SM	A-1, A-2, A-3	0- 0- 0	0- 0- 0	75-88-100	65-83-100	35-65-95	0-18- 35	10-13-15	NP-3 -5

Engineering Properties–Nantucket County, Massachusetts														
Map unit symbol and soil name	Pct. of map unit	Hydrologic group	Depth	USDA texture	Classification		Fragments		Percentage passing sieve number—				Liquid limit	Plasticity index
					Unified	AASHTO	>10 inches	3-10 inches	4	10	40	200		
			In				Pct	Pct					Pct	
294B—Evesboro sand, 3 to 8 percent slopes														
Evesboro	85	A	0-6	Sand	SP, SP-SM	A-1, A-2, A-3	0- 0- 0	0- 0- 0	90-95-100	85-93-100	40-65-90	0- 6- 12	10-13-15	NP-2 -3
			6-26	Loamy sand	SP, SP-SM	A-1, A-2, A-3	0- 0- 0	0- 0- 0	90-95-100	85-93-100	40-65-90	0- 6- 12	10-13-15	NP-2 -3
			26-60	Stratified sand to sandy loam	SC-SM, SM, SP, SP-SM	A-1, A-2, A-3	0- 0- 0	0- 0- 0	75-88-100	65-83-100	35-65-95	0-18- 35	10-13-15	NP-3 -5

Data Source Information

Soil Survey Area: Nantucket County, Massachusetts
Survey Area Data: Version 12, Sep 19, 2014

APPENDIX B:

HydroCAD® Calculations

EXISTING RUNOFF

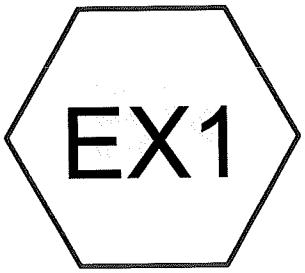

Existing Watershed

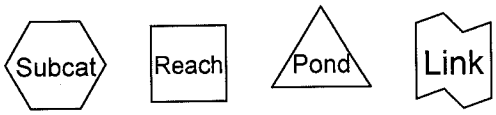

Routing Diagram for NAN-0107J-E
Prepared by Hayes Engineering, Inc., Printed 6/13/2016
HydroCAD® 10.00-16 s/n 03206 © 2015 HydroCAD Software Solutions LLC

Area Listing (all nodes)

Area (sq-ft)	CN	Description (subcatchment-numbers)
89,730	39	>75% Grass cover, Good, HSG A (EX1)
87,123	48	Brush, Poor, HSG A (EX1)
28,003	30	Meadow, non-grazed, HSG A (EX1)
40,269	77	Newly graded area, HSG A (EX1)
38,088	98	Roofs, HSG A (EX1)
283,213	**54**	**TOTAL AREA**

Ground Covers (all nodes)

HSG-A (sq-ft)	HSG-B (sq-ft)	HSG-C (sq-ft)	HSG-D (sq-ft)	Other (sq-ft)	Total (sq-ft)	Ground Cover	Subcatchme Numbers
89,730	0	0	0	0	89,730	>75% Grass cover, Good	EX1
87,123	0	0	0	0	87,123	Brush, Poor	EX1
28,003	0	0	0	0	28,003	Meadow, non-grazed	EX1
40,269	0	0	0	0	40,269	Newly graded area	EX1
38,088	0	0	0	0	38,088	Roofs	EX1
283,213	**0**	**0**	**0**	**0**	**283,213**	**TOTAL AREA**	

Time span=0.00-40.00 hrs, dt=0.02 hrs, 2001 points
Runoff by SCS TR-20 method, UH=SCS, Weighted-CN
Reach routing by Dyn-Stor-Ind method - Pond routing by Dyn-Stor-Ind method

Subcatchment EX1: Existing Watershed Runoff Area=283,213 sf 13.45% Impervious Runoff Depth=0.35"
Flow Length=610' Tc=24.0 min CN=54 Runoff=0.86 cfs 8,149 cf

Total Runoff Area = 283,213 sf Runoff Volume = 8,149 cf Average Runoff Depth = 0.35"
86.55% Pervious = 245,125 sf 13.45% Impervious = 38,088 sf

Summary for Subcatchment EX1: Existing Watershed

Runoff = 0.86 cfs @ 12.56 hrs, Volume= 8,149 cf, Depth= 0.35"

Runoff by SCS TR-20 method, UH=SCS, Weighted-CN, Time Span= 0.00-40.00 hrs, dt= 0.02 hrs
Type III 24-hr 2 Year Rainfall=3.60"

Area (sf)	CN	Description
38,088	98	Roofs, HSG A
40,269	77	Newly graded area, HSG A
28,003	30	Meadow, non-grazed, HSG A
87,123	48	Brush, Poor, HSG A
89,730	39	>75% Grass cover, Good, HSG A
283,213	54	Weighted Average
245,125		86.55% Pervious Area
38,088		13.45% Impervious Area

Tc (min)	Length (feet)	Slope (ft/ft)	Velocity (ft/sec)	Capacity (cfs)	Description
20.2	50	0.0050	0.04		**Sheet Flow, Sheet1** Woods: Light underbrush n= 0.400 P2= 3.60"
2.0	368	0.0375	3.12		**Shallow Concentrated Flow, Shallow1** Unpaved Kv= 16.1 fps
1.8	192	0.0120	1.76		**Shallow Concentrated Flow, Shallow2** Unpaved Kv= 16.1 fps
24.0	610	Total			

Time span=0.00-40.00 hrs, dt=0.02 hrs, 2001 points
Runoff by SCS TR-20 method, UH=SCS, Weighted-CN
Reach routing by Dyn-Stor-Ind method - Pond routing by Dyn-Stor-Ind method

Subcatchment EX1: Existing Watershed Runoff Area=283,213 sf 13.45% Impervious Runoff Depth=0.87"
Flow Length=610' Tc=24.0 min CN=54 Runoff=3.19 cfs 20,582 cf

Total Runoff Area = 283,213 sf Runoff Volume = 20,582 cf Average Runoff Depth = 0.87"
86.55% Pervious = 245,125 sf 13.45% Impervious = 38,088 sf

Summary for Subcatchment EX1: Existing Watershed

Runoff = 3.19 cfs @ 12.42 hrs, Volume= 20,582 cf, Depth= 0.87"

Runoff by SCS TR-20 method, UH=SCS, Weighted-CN, Time Span= 0.00-40.00 hrs, dt= 0.02 hrs
Type III 24-hr 10 Year Rainfall=4.90"

Area (sf)	CN	Description
38,088	98	Roofs, HSG A
40,269	77	Newly graded area, HSG A
28,003	30	Meadow, non-grazed, HSG A
87,123	48	Brush, Poor, HSG A
89,730	39	>75% Grass cover, Good, HSG A
283,213	54	Weighted Average
245,125		86.55% Pervious Area
38,088		13.45% Impervious Area

Tc (min)	Length (feet)	Slope (ft/ft)	Velocity (ft/sec)	Capacity (cfs)	Description
20.2	50	0.0050	0.04		**Sheet Flow, Sheet1** Woods: Light underbrush n= 0.400 P2= 3.60"
2.0	368	0.0375	3.12		**Shallow Concentrated Flow, Shallow1** Unpaved Kv= 16.1 fps
1.8	192	0.0120	1.76		**Shallow Concentrated Flow, Shallow2** Unpaved Kv= 16.1 fps
24.0	610	Total			

Time span=0.00-40.00 hrs, dt=0.02 hrs, 2001 points
Runoff by SCS TR-20 method, UH=SCS, Weighted-CN
Reach routing by Dyn-Stor-Ind method - Pond routing by Dyn-Stor-Ind method

Subcatchment EX1: Existing Watershed Runoff Area=283,213 sf 13.45% Impervious Runoff Depth=1.33"
Flow Length=610' Tc=24.0 min CN=54 Runoff=5.42 cfs 31,393 cf

Total Runoff Area = 283,213 sf Runoff Volume = 31,393 cf Average Runoff Depth = 1.33"
86.55% Pervious = 245,125 sf 13.45% Impervious = 38,088 sf

Summary for Subcatchment EX1: Existing Watershed

Runoff = 5.42 cfs @ 12.39 hrs, Volume= 31,393 cf, Depth= 1.33"

Runoff by SCS TR-20 method, UH=SCS, Weighted-CN, Time Span= 0.00-40.00 hrs, dt= 0.02 hrs
Type III 24-hr 25 Year Rainfall=5.80"

Area (sf)	CN	Description
38,088	98	Roofs, HSG A
40,269	77	Newly graded area, HSG A
28,003	30	Meadow, non-grazed, HSG A
87,123	48	Brush, Poor, HSG A
89,730	39	>75% Grass cover, Good, HSG A
283,213	54	Weighted Average
245,125		86.55% Pervious Area
38,088		13.45% Impervious Area

Tc (min)	Length (feet)	Slope (ft/ft)	Velocity (ft/sec)	Capacity (cfs)	Description
20.2	50	0.0050	0.04		**Sheet Flow, Sheet1** Woods: Light underbrush n= 0.400 P2= 3.60"
2.0	368	0.0375	3.12		**Shallow Concentrated Flow, Shallow1** Unpaved Kv= 16.1 fps
1.8	192	0.0120	1.76		**Shallow Concentrated Flow, Shallow2** Unpaved Kv= 16.1 fps
24.0	610	Total			

Time span=0.00-40.00 hrs, dt=0.02 hrs, 2001 points
Runoff by SCS TR-20 method, UH=SCS, Weighted-CN
Reach routing by Dyn-Stor-Ind method - Pond routing by Dyn-Stor-Ind method

Subcatchment EX1: Existing Watershed Runoff Area=283,213 sf 13.45% Impervious Runoff Depth=1.73"
Flow Length=610' Tc=24.0 min CN=54 Runoff=7.37 cfs 40,776 cf

Total Runoff Area = 283,213 sf Runoff Volume = 40,776 cf Average Runoff Depth = 1.73"
86.55% Pervious = 245,125 sf 13.45% Impervious = 38,088 sf

Summary for Subcatchment EX1: Existing Watershed

Runoff = 7.37 cfs @ 12.38 hrs, Volume= 40,776 cf, Depth= 1.73"

Runoff by SCS TR-20 method, UH=SCS, Weighted-CN, Time Span= 0.00-40.00 hrs, dt= 0.02 hrs
Type III 24-hr 50 Year Rainfall=6.50"

Area (sf)	CN	Description
38,088	98	Roofs, HSG A
40,269	77	Newly graded area, HSG A
28,003	30	Meadow, non-grazed, HSG A
87,123	48	Brush, Poor, HSG A
89,730	39	>75% Grass cover, Good, HSG A
283,213	54	Weighted Average
245,125		86.55% Pervious Area
38,088		13.45% Impervious Area

Tc (min)	Length (feet)	Slope (ft/ft)	Velocity (ft/sec)	Capacity (cfs)	Description
20.2	50	0.0050	0.04		**Sheet Flow, Sheet1** Woods: Light underbrush n= 0.400 P2= 3.60"
2.0	368	0.0375	3.12		**Shallow Concentrated Flow, Shallow1** Unpaved Kv= 16.1 fps
1.8	192	0.0120	1.76		**Shallow Concentrated Flow, Shallow2** Unpaved Kv= 16.1 fps
24.0	610	Total			

Time span=0.00-40.00 hrs, dt=0.02 hrs, 2001 points
Runoff by SCS TR-20 method, UH=SCS, Weighted-CN
Reach routing by Dyn-Stor-Ind method - Pond routing by Dyn-Stor-Ind method

Subcatchment EX1: Existing Watershed Runoff Area=283,213 sf 13.45% Impervious Runoff Depth=2.16"
Flow Length=610' Tc=24.0 min CN=54 Runoff=9.49 cfs 50,873 cf

Total Runoff Area = 283,213 sf Runoff Volume = 50,873 cf Average Runoff Depth = 2.16"
86.55% Pervious = 245,125 sf 13.45% Impervious = 38,088 sf

Summary for Subcatchment EX1: Existing Watershed

Runoff = 9.49 cfs @ 12.37 hrs, Volume= 50,873 cf, Depth= 2.16"

Runoff by SCS TR-20 method, UH=SCS, Weighted-CN, Time Span= 0.00-40.00 hrs, dt= 0.02 hrs
Type III 24-hr 100 Year Rainfall=7.20"

Area (sf)	CN	Description
38,088	98	Roofs, HSG A
40,269	77	Newly graded area, HSG A
28,003	30	Meadow, non-grazed, HSG A
87,123	48	Brush, Poor, HSG A
89,730	39	>75% Grass cover, Good, HSG A
283,213	54	Weighted Average
245,125		86.55% Pervious Area
38,088		13.45% Impervious Area

Tc (min)	Length (feet)	Slope (ft/ft)	Velocity (ft/sec)	Capacity (cfs)	Description
20.2	50	0.0050	0.04		**Sheet Flow, Sheet1** Woods: Light underbrush n= 0.400 P2= 3.60"
2.0	368	0.0375	3.12		**Shallow Concentrated Flow, Shallow1** Unpaved Kv= 16.1 fps
1.8	192	0.0120	1.76		**Shallow Concentrated Flow, Shallow2** Unpaved Kv= 16.1 fps
24.0	610	Total			

PROPOSED RUNOFF

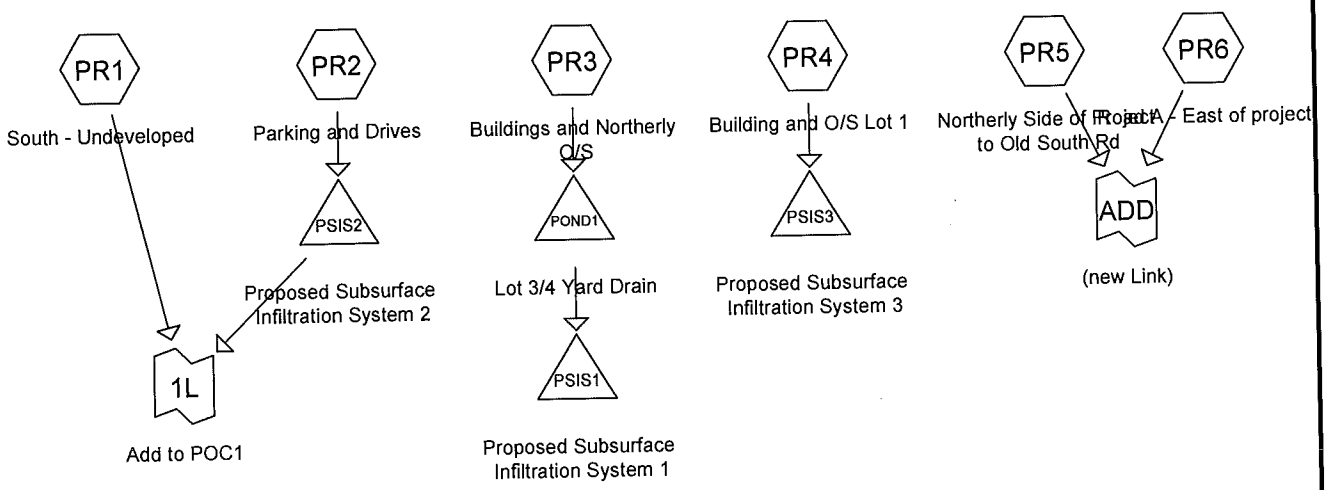

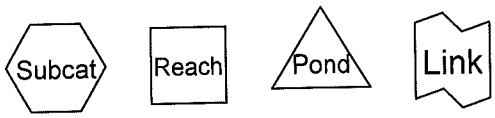

Routing Diagram for NAN-0107J-P
Prepared by Hayes Engineering, Inc., Printed 6/13/2016
HydroCAD® 10.00-16 s/n 03206 © 2015 HydroCAD Software Solutions LLC

Area Listing (all nodes)

Area (sq-ft)	CN	Description (subcatchment-numbers)
181,857	39	>75% Grass cover, Good, HSG A (PR1, PR2, PR3, PR4, PR5, PR6)
4,949	77	Newly graded area, HSG A (PR1)
59,246	98	Paved parking, HSG A (PR2)
23,968	98	Paved roads w/curbs & sewers, HSG A (PR5, PR6)
5,900	98	Roofs, HSG A (PR4)
6,075	98	Unconnected pavement, HSG A (PR1)
11,922	98	Unconnected roofs, HSG A (PR3)
293,917	**61**	**TOTAL AREA**

Ground Covers (all nodes)

HSG-A (sq-ft)	HSG-B (sq-ft)	HSG-C (sq-ft)	HSG-D (sq-ft)	Other (sq-ft)	Total (sq-ft)	Ground Cover	Subca Numbe
181,857	0	0	0	0	181,857	>75% Grass cover, Good	
4,949	0	0	0	0	4,949	Newly graded area	
59,246	0	0	0	0	59,246	Paved parking	
23,968	0	0	0	0	23,968	Paved roads w/curbs & sewers	
5,900	0	0	0	0	5,900	Roofs	
6,075	0	0	0	0	6,075	Unconnected pavement	
11,922	0	0	0	0	11,922	Unconnected roofs	
293,917	**0**	**0**	**0**	**0**	**293,917**	**TOTAL AREA**	

Time span=0.00-40.00 hrs, dt=0.05 hrs, 801 points
Runoff by SCS TR-20 method, UH=SCS, Weighted-CN
Reach routing by Dyn-Stor-Ind method - Pond routing by Dyn-Stor-Ind method

Subcatchment PR1: South - Undeveloped Runoff Area=96,297 sf 6.31% Impervious Runoff Depth=0.06"
Flow Length=365' Tc=11.4 min UI Adjusted CN=43 Runoff=0.02 cfs 509 cf

Subcatchment PR2: Parking and Drives Runoff Area=93,320 sf 63.49% Impervious Runoff Depth=1.44"
Flow Length=392' Tc=10.1 min CN=76 Runoff=3.05 cfs 11,185 cf

Subcatchment PR3: Buildings and Northerly O/S Runoff Area=29,748 sf 40.08% Impervious Runoff Depth=0.71"
Flow Length=272' Slope=0.0100 '/' Tc=12.5 min CN=63 Runoff=0.36 cfs 1,757 cf

Subcatchment PR4: Building and O/S Lot 1 Runoff Area=17,215 sf 34.27% Impervious Runoff Depth=0.53"
Flow Length=67' Slope=0.0100 '/' Tc=10.4 min CN=59 Runoff=0.14 cfs 765 cf

Subcatchment PR5: Northerly Side of Project to Old Runoff Area=12,291 sf 74.09% Impervious Runoff Depth=1.94"
Tc=6.0 min CN=83 Runoff=0.63 cfs 1,990 cf

Subcatchment PR6: Road A - East of project Runoff Area=45,046 sf 32.99% Impervious Runoff Depth=0.49"
Tc=6.0 min CN=58 Runoff=0.36 cfs 1,850 cf

Pond POND1: Lot 3/4 Yard Drain Peak Elev=33.86' Storage=7 cf Inflow=0.36 cfs 1,757 cf
Discarded=0.02 cfs 153 cf Primary=0.34 cfs 1,604 cf Outflow=0.37 cfs 1,757 cf

Pond PSIS1: Proposed Subsurface Infiltration System 1 Peak Elev=25.65' Storage=202 cf Inflow=0.34 cfs 1,604 cf
Outflow=0.15 cfs 1,605 cf

Pond PSIS2: Proposed Subsurface Infiltration System Peak Elev=27.68' Storage=3,850 cf Inflow=3.05 cfs 11,185 cf
Discarded=0.39 cfs 11,191 cf Primary=0.00 cfs 0 cf Outflow=0.39 cfs 11,191 cf

Pond PSIS3: Proposed Subsurface Infiltration System 3 Peak Elev=25.25' Storage=45 cf Inflow=0.14 cfs 765 cf
Outflow=0.09 cfs 769 cf

Link 1L: Add to POC1 Inflow=0.02 cfs 509 cf
Primary=0.02 cfs 509 cf

Link ADD: (new Link) Inflow=0.98 cfs 3,840 cf
Primary=0.98 cfs 3,840 cf

Total Runoff Area = 293,917 sf Runoff Volume = 18,057 cf Average Runoff Depth = 0.74"
63.56% Pervious = 186,806 sf 36.44% Impervious = 107,111 sf

Summary for Subcatchment PR1: South - Undeveloped

Runoff = 0.02 cfs @ 15.17 hrs, Volume= 509 cf, Depth= 0.06"

Runoff by SCS TR-20 method, UH=SCS, Weighted-CN, Time Span= 0.00-40.00 hrs, dt= 0.05 hrs
Type III 24-hr 2 Year Rainfall=3.60"

Area (sf)	CN	Adj	Description
6,075	98		Unconnected pavement, HSG A
4,949	77		Newly graded area, HSG A
85,273	39		>75% Grass cover, Good, HSG A
96,297	45	43	Weighted Average, UI Adjusted
90,222			93.69% Pervious Area
6,075			6.31% Impervious Area
6,075			100.00% Unconnected

Tc (min)	Length (feet)	Slope (ft/ft)	Velocity (ft/sec)	Capacity (cfs)	Description
9.5	50	0.0120	0.09		**Sheet Flow, Sheet1** Grass: Dense n= 0.240 P2= 3.60"
1.9	315	0.0300	2.79		**Shallow Concentrated Flow, Shallow1** Unpaved Kv= 16.1 fps
11.4	365	Total			

Summary for Subcatchment PR2: Parking and Drives

Runoff = 3.05 cfs @ 12.15 hrs, Volume= 11,185 cf, Depth= 1.44"

Runoff by SCS TR-20 method, UH=SCS, Weighted-CN, Time Span= 0.00-40.00 hrs, dt= 0.05 hrs
Type III 24-hr 2 Year Rainfall=3.60"

Area (sf)	CN	Description
59,246	98	Paved parking, HSG A
34,074	39	>75% Grass cover, Good, HSG A
93,320	76	Weighted Average
34,074		36.51% Pervious Area
59,246		63.49% Impervious Area

Tc (min)	Length (feet)	Slope (ft/ft)	Velocity (ft/sec)	Capacity (cfs)	Description
7.7	50	0.0200	0.11		**Sheet Flow, Sheet** Grass: Dense n= 0.240 P2= 3.60"
0.6	127	0.0500	3.60		**Shallow Concentrated Flow, Shallow1** Unpaved Kv= 16.1 fps
1.8	215	0.0100	2.03		**Shallow Concentrated Flow, Shallow2** Paved Kv= 20.3 fps
10.1	392	Total			

Summary for Subcatchment PR3: Buildings and Northerly O/S

Runoff = 0.36 cfs @ 12.21 hrs, Volume= 1,757 cf, Depth= 0.71"

Runoff by SCS TR-20 method, UH=SCS, Weighted-CN, Time Span= 0.00-40.00 hrs, dt= 0.05 hrs
Type III 24-hr 2 Year Rainfall=3.60"

Area (sf)	CN	Description
11,922	98	Unconnected roofs, HSG A
17,826	39	>75% Grass cover, Good, HSG A
29,748	63	Weighted Average
17,826		59.92% Pervious Area
11,922		40.08% Impervious Area
11,922		100.00% Unconnected

Tc (min)	Length (feet)	Slope (ft/ft)	Velocity (ft/sec)	Capacity (cfs)	Description
10.2	50	0.0100	0.08		**Sheet Flow, Sheet** Grass: Dense n= 0.240 P2= 3.60"
2.3	222	0.0100	1.61		**Shallow Concentrated Flow, Shallow** Unpaved Kv= 16.1 fps
12.5	272	Total			

Summary for Subcatchment PR4: Building and O/S Lot 1

Runoff = 0.14 cfs @ 12.20 hrs, Volume= 765 cf, Depth= 0.53"

Runoff by SCS TR-20 method, UH=SCS, Weighted-CN, Time Span= 0.00-40.00 hrs, dt= 0.05 hrs
Type III 24-hr 2 Year Rainfall=3.60"

Area (sf)	CN	Description
5,900	98	Roofs, HSG A
11,315	39	>75% Grass cover, Good, HSG A
17,215	59	Weighted Average
11,315		65.73% Pervious Area
5,900		34.27% Impervious Area

Tc (min)	Length (feet)	Slope (ft/ft)	Velocity (ft/sec)	Capacity (cfs)	Description
10.2	50	0.0100	0.08		**Sheet Flow, Sheet1** Grass: Dense n= 0.240 P2= 3.60"
0.2	17	0.0100	1.61		**Shallow Concentrated Flow, Shallow1** Unpaved Kv= 16.1 fps
10.4	67	Total			

Summary for Subcatchment PR5: Northerly Side of Project to Old South Rd

Runoff = 0.63 cfs @ 12.09 hrs, Volume= 1,990 cf, Depth= 1.94"

Runoff by SCS TR-20 method, UH=SCS, Weighted-CN, Time Span= 0.00-40.00 hrs, dt= 0.05 hrs
Type III 24-hr 2 Year Rainfall=3.60"

Area (sf)	CN	Description
9,106	98	Paved roads w/curbs & sewers, HSG A
3,185	39	>75% Grass cover, Good, HSG A
12,291	83	Weighted Average
3,185		25.91% Pervious Area
9,106		74.09% Impervious Area

Tc (min)	Length (feet)	Slope (ft/ft)	Velocity (ft/sec)	Capacity (cfs)	Description
6.0					**Direct Entry, Min. Tc = 0.1h**

Summary for Subcatchment PR6: Road A - East of project

Runoff = 0.36 cfs @ 12.13 hrs, Volume= 1,850 cf, Depth= 0.49"

Runoff by SCS TR-20 method, UH=SCS, Weighted-CN, Time Span= 0.00-40.00 hrs, dt= 0.05 hrs
Type III 24-hr 2 Year Rainfall=3.60"

Area (sf)	CN	Description
14,862	98	Paved roads w/curbs & sewers, HSG A
30,184	39	>75% Grass cover, Good, HSG A
45,046	58	Weighted Average
30,184		67.01% Pervious Area
14,862		32.99% Impervious Area

Tc (min)	Length (feet)	Slope (ft/ft)	Velocity (ft/sec)	Capacity (cfs)	Description
6.0					**Direct Entry, Min. Tc = 0.1h**

Summary for Pond POND1: Lot 3/4 Yard Drain

Inflow Area = 29,748 sf, 40.08% Impervious, Inflow Depth = 0.71" for 2 Year event
Inflow = 0.36 cfs @ 12.21 hrs, Volume= 1,757 cf
Outflow = 0.37 cfs @ 12.21 hrs, Volume= 1,757 cf, Atten= 0%, Lag= 0.2 min
Discarded = 0.02 cfs @ 12.21 hrs, Volume= 153 cf
Primary = 0.34 cfs @ 12.21 hrs, Volume= 1,604 cf

Routing by Dyn-Stor-Ind method, Time Span= 0.00-40.00 hrs, dt= 0.05 hrs
Peak Elev= 33.86' @ 12.21 hrs Surf.Area= 125 sf Storage= 7 cf

Plug-Flow detention time= 0.1 min calculated for 1,755 cf (100% of inflow)
Center-of-Mass det. time= 0.1 min (898.5 - 898.4)

Volume	Invert	Avail.Storage	Storage Description
#1	33.75'	1,004 cf	**Custom Stage Data (Prismatic)** Listed below (Recalc)

Elevation (feet)	Surf.Area (sq-ft)	Inc.Store (cubic-feet)	Cum.Store (cubic-feet)
33.75	4	0	0
34.00	275	35	35
34.50	750	256	291
35.00	2,100	713	1,004

Device	Routing	Invert	Outlet Devices
#1	Discarded	33.75'	**8.270 in/hr Exfiltration over Surface area**
#2	Primary	33.75'	**Nyoplast 10" Dome Grate Inlet** Head (feet) 0.00 0.10 0.20 1.00 Disch. (cfs) 0.000 0.280 0.800 1.800

Discarded OutFlow Max=0.02 cfs @ 12.21 hrs HW=33.86' (Free Discharge)
└**1=Exfiltration** (Exfiltration Controls 0.02 cfs)

Primary OutFlow Max=0.34 cfs @ 12.21 hrs HW=33.86' TW=25.19' (Dynamic Tailwater)
└**2=Nyoplast 10" Dome Grate Inlet** (Custom Controls 0.34 cfs)

Summary for Pond PSIS1: Proposed Subsurface Infiltration System 1

Inflow Area =	29,748 sf,	40.08% Impervious,	Inflow Depth =	0.65"	for 2 Year event
Inflow =	0.34 cfs @	12.21 hrs, Volume=	1,604 cf		
Outflow =	0.15 cfs @	12.15 hrs, Volume=	1,605 cf,	Atten= 56%,	Lag= 0.0 min
Discarded =	0.15 cfs @	12.15 hrs, Volume=	1,605 cf		

Routing by Dyn-Stor-Ind method, Time Span= 0.00-40.00 hrs, dt= 0.05 hrs
Peak Elev= 25.65' @ 12.61 hrs Surf.Area= 781 sf Storage= 202 cf

Plug-Flow detention time= (not calculated: outflow precedes inflow)
Center-of-Mass det. time= 6.1 min (900.8 - 894.7)

Volume	Invert	Avail.Storage	Storage Description
#1A	25.00'	1,355 cf	**10.33'W x 75.54'L x 6.75'H Field A** 5,269 cf Overall - 1,882 cf Embedded = 3,387 cf x 40.0% Voids
#2A	25.75'	1,882 cf	**StormTech MC-4500 +Cap** x 17 Inside #1 Effective Size= 90.4"W x 60.0"H => 26.46 sf x 4.03'L = 106.5 cf Overall Size= 100.0"W x 60.0"H x 4.33'L with 0.31' Overlap Cap Storage= +35.7 cf x 2 x 1 rows = 71.4 cf
		3,237 cf	Total Available Storage

Storage Group A created with Chamber Wizard

Device	Routing	Invert	Outlet Devices
#1	Discarded	25.00'	**8.270 in/hr Exfiltration over Horizontal area**

Discarded OutFlow Max=0.15 cfs @ 12.15 hrs HW=25.07' (Free Discharge)
└**1=Exfiltration** (Exfiltration Controls 0.15 cfs)

Summary for Pond PSIS2: Proposed Subsurface Infiltration System 2

Inflow Area =	93,320 sf,	63.49% Impervious,	Inflow Depth =	1.44"	for 2 Year event
Inflow =	3.05 cfs @	12.15 hrs, Volume=	11,185 cf		
Outflow =	0.39 cfs @	11.85 hrs, Volume=	11,191 cf,	Atten= 87%,	Lag= 0.0 min
Discarded =	0.39 cfs @	11.85 hrs, Volume=	11,191 cf		
Primary =	0.00 cfs @	0.00 hrs, Volume=	0 cf		

Routing by Dyn-Stor-Ind method, Time Span= 0.00-40.00 hrs, dt= 0.05 hrs
Peak Elev= 27.68' @ 13.09 hrs Surf.Area= 2,038 sf Storage= 3,850 cf

Plug-Flow detention time= (not calculated: outflow precedes inflow)
Center-of-Mass det. time= 83.7 min (936.4 - 852.7)

Volume	Invert	Avail.Storage	Storage Description
#1A	25.00'	3,373 cf	**28.50'W x 71.52'L x 6.75'H Field A** 13,758 cf Overall - 5,326 cf Embedded = 8,432 cf x 40.0% Voids
#2A	25.75'	5,326 cf	**StormTech MC-4500 +Cap** x 48 Inside #1 Effective Size= 90.4"W x 60.0"H => 26.46 sf x 4.03'L = 106.5 cf Overall Size= 100.0"W x 60.0"H x 4.33'L with 0.31' Overlap 3 Rows of 16 Chambers Cap Storage= +35.7 cf x 2 x 3 rows = 214.2 cf
		8,699 cf	Total Available Storage

Storage Group A created with Chamber Wizard

Device	Routing	Invert	Outlet Devices
#1	Discarded	25.00'	**8.270 in/hr Exfiltration over Horizontal area**
#2	Primary	30.00'	**18.0" Round Culvert** L= 30.0' CPP, square edge headwall, Ke= 0.500 Inlet / Outlet Invert= 30.00' / 29.50' S= 0.0167 '/' Cc= 0.900 n= 0.010, Flow Area= 1.77 sf

Discarded OutFlow Max=0.39 cfs @ 11.85 hrs HW=25.07' (Free Discharge)
└**1=Exfiltration** (Exfiltration Controls 0.39 cfs)

Primary OutFlow Max=0.00 cfs @ 0.00 hrs HW=25.00' TW=0.00' (Dynamic Tailwater)
└**2=Culvert** (Controls 0.00 cfs)

Summary for Pond PSIS3: Proposed Subsurface Infiltration System 3

Inflow Area =	17,215 sf, 34.27% Impervious,	Inflow Depth =	0.53"	for 2 Year event
Inflow =	0.14 cfs @ 12.20 hrs,	Volume=	765 cf	
Outflow =	0.09 cfs @ 12.20 hrs,	Volume=	769 cf,	Atten= 38%, Lag= 0.0 min
Discarded =	0.09 cfs @ 12.20 hrs,	Volume=	769 cf	

Routing by Dyn-Stor-Ind method, Time Span= 0.00-40.00 hrs, dt= 0.05 hrs
Peak Elev= 25.25' @ 12.51 hrs Surf.Area= 448 sf Storage= 45 cf

Plug-Flow detention time= (not calculated: outflow precedes inflow)
Center-of-Mass det. time= 2.0 min (916.5 - 914.5)

Volume	Invert	Avail.Storage	Storage Description
#1A	25.00'	797 cf	**10.33'W x 43.34'L x 6.75'H Field A** 3,023 cf Overall - 1,030 cf Embedded = 1,993 cf x 40.0% Voids
#2A	25.75'	1,030 cf	**StormTech MC-4500 +Cap** x 9 Inside #1 Effective Size= 90.4"W x 60.0"H => 26.46 sf x 4.03'L = 106.5 cf Overall Size= 100.0"W x 60.0"H x 4.33'L with 0.31' Overlap Cap Storage= +35.7 cf x 2 x 1 rows = 71.4 cf
		1,827 cf	Total Available Storage

Storage Group A created with Chamber Wizard

Device	Routing	Invert	Outlet Devices
#1	Discarded	25.00'	**8.270 in/hr Exfiltration over Horizontal area**

Discarded OutFlow Max=0.09 cfs @ 12.20 hrs HW=25.08' (Free Discharge)
└**1=Exfiltration** (Exfiltration Controls 0.09 cfs)

Summary for Link 1L: Add to POC1

Inflow Area =	189,617 sf,	34.45% Impervious,	Inflow Depth =	0.03"	for 2 Year event
Inflow =	0.02 cfs @	15.17 hrs, Volume=	509 cf		
Primary =	0.02 cfs @	15.17 hrs, Volume=	509 cf,	Atten= 0%,	Lag= 0.0 min

Primary outflow = Inflow, Time Span= 0.00-40.00 hrs, dt= 0.05 hrs

Summary for Link ADD: (new Link)

Inflow Area =	57,337 sf,	41.80% Impervious,	Inflow Depth =	0.80"	for 2 Year event
Inflow =	0.98 cfs @	12.11 hrs, Volume=	3,840 cf		
Primary =	0.98 cfs @	12.11 hrs, Volume=	3,840 cf,	Atten= 0%,	Lag= 0.0 min

Primary outflow = Inflow, Time Span= 0.00-40.00 hrs, dt= 0.05 hrs

Time span=0.00-40.00 hrs, dt=0.05 hrs, 801 points
Runoff by SCS TR-20 method, UH=SCS, Weighted-CN
Reach routing by Dyn-Stor-Ind method - Pond routing by Dyn-Stor-Ind method

Subcatchment PR1: South - Undeveloped Runoff Area=96,297 sf 6.31% Impervious Runoff Depth=0.33"
Flow Length=365' Tc=11.4 min UI Adjusted CN=43 Runoff=0.25 cfs 2,617 cf

Subcatchment PR2: Parking and Drives Runoff Area=93,320 sf 63.49% Impervious Runoff Depth=2.45"
Flow Length=392' Tc=10.1 min CN=76 Runoff=5.30 cfs 19,079 cf

Subcatchment PR3: Buildings and Northerly O/S Runoff Area=29,748 sf 40.08% Impervious Runoff Depth=1.45"
Flow Length=272' Slope=0.0100 '/' Tc=12.5 min CN=63 Runoff=0.85 cfs 3,584 cf

Subcatchment PR4: Building and O/S Lot 1 Runoff Area=17,215 sf 34.27% Impervious Runoff Depth=1.18"
Flow Length=67' Slope=0.0100 '/' Tc=10.4 min CN=59 Runoff=0.40 cfs 1,690 cf

Subcatchment PR5: Northerly Side of Project to Old Runoff Area=12,291 sf 74.09% Impervious Runoff Depth=3.08"
Tc=6.0 min CN=83 Runoff=0.99 cfs 3,159 cf

Subcatchment PR6: Road A - East of project Runoff Area=45,046 sf 32.99% Impervious Runoff Depth=1.11"
Tc=6.0 min CN=58 Runoff=1.14 cfs 4,183 cf

Pond POND1: Lot 3/4 Yard Drain Peak Elev=33.95' Storage=23 cf Inflow=0.85 cfs 3,584 cf
Discarded=0.04 cfs 263 cf Primary=0.81 cfs 3,321 cf Outflow=0.85 cfs 3,584 cf

Pond PSIS1: Proposed Subsurface Infiltration System 1 Peak Elev=26.90' Storage=955 cf Inflow=0.81 cfs 3,321 cf
Outflow=0.15 cfs 3,325 cf

Pond PSIS2: Proposed Subsurface Infiltration System Peak Elev=30.31' Storage=7,494 cf Inflow=5.30 cfs 19,079 cf
Discarded=0.39 cfs 17,781 cf Primary=0.49 cfs 1,302 cf Outflow=0.88 cfs 19,083 cf

Pond PSIS3: Proposed Subsurface Infiltration System 3 Peak Elev=26.54' Storage=412 cf Inflow=0.40 cfs 1,690 cf
Outflow=0.09 cfs 1,694 cf

Link 1L: Add to POC1 Inflow=0.64 cfs 3,920 cf
Primary=0.64 cfs 3,920 cf

Link ADD: (new Link) Inflow=2.13 cfs 7,341 cf
Primary=2.13 cfs 7,341 cf

Total Runoff Area = 293,917 sf Runoff Volume = 34,312 cf Average Runoff Depth = 1.40"
63.56% Pervious = 186,806 sf 36.44% Impervious = 107,111 sf

Summary for Subcatchment PR1: South - Undeveloped

Runoff = 0.25 cfs @ 12.45 hrs, Volume= 2,617 cf, Depth= 0.33"

Runoff by SCS TR-20 method, UH=SCS, Weighted-CN, Time Span= 0.00-40.00 hrs, dt= 0.05 hrs
Type III 24-hr 10 Year Rainfall=4.90"

Area (sf)	CN	Adj	Description
6,075	98		Unconnected pavement, HSG A
4,949	77		Newly graded area, HSG A
85,273	39		>75% Grass cover, Good, HSG A
96,297	45	43	Weighted Average, UI Adjusted
90,222			93.69% Pervious Area
6,075			6.31% Impervious Area
6,075			100.00% Unconnected

Tc (min)	Length (feet)	Slope (ft/ft)	Velocity (ft/sec)	Capacity (cfs)	Description
9.5	50	0.0120	0.09		**Sheet Flow, Sheet1** Grass: Dense n= 0.240 P2= 3.60"
1.9	315	0.0300	2.79		**Shallow Concentrated Flow, Shallow1** Unpaved Kv= 16.1 fps
11.4	365	Total			

Summary for Subcatchment PR2: Parking and Drives

Runoff = 5.30 cfs @ 12.15 hrs, Volume= 19,079 cf, Depth= 2.45"

Runoff by SCS TR-20 method, UH=SCS, Weighted-CN, Time Span= 0.00-40.00 hrs, dt= 0.05 hrs
Type III 24-hr 10 Year Rainfall=4.90"

Area (sf)	CN	Description
59,246	98	Paved parking, HSG A
34,074	39	>75% Grass cover, Good, HSG A
93,320	76	Weighted Average
34,074		36.51% Pervious Area
59,246		63.49% Impervious Area

Tc (min)	Length (feet)	Slope (ft/ft)	Velocity (ft/sec)	Capacity (cfs)	Description
7.7	50	0.0200	0.11		**Sheet Flow, Sheet** Grass: Dense n= 0.240 P2= 3.60"
0.6	127	0.0500	3.60		**Shallow Concentrated Flow, Shallow1** Unpaved Kv= 16.1 fps
1.8	215	0.0100	2.03		**Shallow Concentrated Flow, Shallow2** Paved Kv= 20.3 fps
10.1	392	Total			

Summary for Subcatchment PR3: Buildings and Northerly O/S

Runoff = 0.85 cfs @ 12.19 hrs, Volume= 3,584 cf, Depth= 1.45"

Runoff by SCS TR-20 method, UH=SCS, Weighted-CN, Time Span= 0.00-40.00 hrs, dt= 0.05 hrs
Type III 24-hr 10 Year Rainfall=4.90"

Area (sf)	CN	Description
11,922	98	Unconnected roofs, HSG A
17,826	39	>75% Grass cover, Good, HSG A
29,748	63	Weighted Average
17,826		59.92% Pervious Area
11,922		40.08% Impervious Area
11,922		100.00% Unconnected

Tc (min)	Length (feet)	Slope (ft/ft)	Velocity (ft/sec)	Capacity (cfs)	Description
10.2	50	0.0100	0.08		**Sheet Flow, Sheet** Grass: Dense n= 0.240 P2= 3.60"
2.3	222	0.0100	1.61		**Shallow Concentrated Flow, Shallow** Unpaved Kv= 16.1 fps
12.5	272	Total			

Summary for Subcatchment PR4: Building and O/S Lot 1

Runoff = 0.40 cfs @ 12.17 hrs, Volume= 1,690 cf, Depth= 1.18"

Runoff by SCS TR-20 method, UH=SCS, Weighted-CN, Time Span= 0.00-40.00 hrs, dt= 0.05 hrs
Type III 24-hr 10 Year Rainfall=4.90"

Area (sf)	CN	Description
5,900	98	Roofs, HSG A
11,315	39	>75% Grass cover, Good, HSG A
17,215	59	Weighted Average
11,315		65.73% Pervious Area
5,900		34.27% Impervious Area

Tc (min)	Length (feet)	Slope (ft/ft)	Velocity (ft/sec)	Capacity (cfs)	Description
10.2	50	0.0100	0.08		**Sheet Flow, Sheet1** Grass: Dense n= 0.240 P2= 3.60"
0.2	17	0.0100	1.61		**Shallow Concentrated Flow, Shallow1** Unpaved Kv= 16.1 fps
10.4	67	Total			

Summary for Subcatchment PR5: Northerly Side of Project to Old South Rd

Runoff = 0.99 cfs @ 12.09 hrs, Volume= 3,159 cf, Depth= 3.08"

Runoff by SCS TR-20 method, UH=SCS, Weighted-CN, Time Span= 0.00-40.00 hrs, dt= 0.05 hrs
Type III 24-hr 10 Year Rainfall=4.90"

Area (sf)	CN	Description
9,106	98	Paved roads w/curbs & sewers, HSG A
3,185	39	>75% Grass cover, Good, HSG A
12,291	83	Weighted Average
3,185		25.91% Pervious Area
9,106		74.09% Impervious Area

Tc (min)	Length (feet)	Slope (ft/ft)	Velocity (ft/sec)	Capacity (cfs)	Description
6.0					**Direct Entry, Min. Tc = 0.1h**

Summary for Subcatchment PR6: Road A - East of project

Runoff = 1.14 cfs @ 12.11 hrs, Volume= 4,183 cf, Depth= 1.11"

Runoff by SCS TR-20 method, UH=SCS, Weighted-CN, Time Span= 0.00-40.00 hrs, dt= 0.05 hrs
Type III 24-hr 10 Year Rainfall=4.90"

Area (sf)	CN	Description
14,862	98	Paved roads w/curbs & sewers, HSG A
30,184	39	>75% Grass cover, Good, HSG A
45,046	58	Weighted Average
30,184		67.01% Pervious Area
14,862		32.99% Impervious Area

Tc (min)	Length (feet)	Slope (ft/ft)	Velocity (ft/sec)	Capacity (cfs)	Description
6.0					**Direct Entry, Min. Tc = 0.1h**

Summary for Pond POND1: Lot 3/4 Yard Drain

Inflow Area = 29,748 sf, 40.08% Impervious, Inflow Depth = 1.45" for 10 Year event
Inflow = 0.85 cfs @ 12.19 hrs, Volume= 3,584 cf
Outflow = 0.85 cfs @ 12.21 hrs, Volume= 3,584 cf, Atten= 1%, Lag= 0.9 min
Discarded = 0.04 cfs @ 12.21 hrs, Volume= 263 cf
Primary = 0.81 cfs @ 12.21 hrs, Volume= 3,321 cf

Routing by Dyn-Stor-Ind method, Time Span= 0.00-40.00 hrs, dt= 0.05 hrs
Peak Elev= 33.95' @ 12.21 hrs Surf.Area= 226 sf Storage= 23 cf

Plug-Flow detention time= 0.2 min calculated for 3,580 cf (100% of inflow)
Center-of-Mass det. time= 0.2 min (874.1 - 873.8)

Volume	Invert	Avail.Storage	Storage Description
#1	33.75'	1,004 cf	**Custom Stage Data (Prismatic)** Listed below (Recalc)

Elevation (feet)	Surf.Area (sq-ft)	Inc.Store (cubic-feet)	Cum.Store (cubic-feet)
33.75	4	0	0
34.00	275	35	35
34.50	750	256	291
35.00	2,100	713	1,004

Device	Routing	Invert	Outlet Devices
#1	Discarded	33.75'	**8.270 in/hr Exfiltration over Surface area**
#2	Primary	33.75'	**Nyoplast 10" Dome Grate Inlet** Head (feet) 0.00 0.10 0.20 1.00 Disch. (cfs) 0.000 0.280 0.800 1.800

Discarded OutFlow Max=0.04 cfs @ 12.21 hrs HW=33.95' (Free Discharge)
1=Exfiltration (Exfiltration Controls 0.04 cfs)

Primary OutFlow Max=0.80 cfs @ 12.21 hrs HW=33.95' TW=25.90' (Dynamic Tailwater)
2=Nyoplast 10" Dome Grate Inlet (Custom Controls 0.80 cfs)

Summary for Pond PSIS1: Proposed Subsurface Infiltration System 1

Inflow Area =	29,748 sf, 40.08% Impervious,	Inflow Depth = 1.34"	for 10 Year event	
Inflow =	0.81 cfs @ 12.21 hrs,	Volume=	3,321 cf	
Outflow =	0.15 cfs @ 12.05 hrs,	Volume=	3,325 cf,	Atten= 81%, Lag= 0.0 min
Discarded =	0.15 cfs @ 12.05 hrs,	Volume=	3,325 cf	

Routing by Dyn-Stor-Ind method, Time Span= 0.00-40.00 hrs, dt= 0.05 hrs
Peak Elev= 26.90' @ 12.96 hrs Surf.Area= 781 sf Storage= 955 cf

Plug-Flow detention time= (not calculated: outflow precedes inflow)
Center-of-Mass det. time= 49.4 min (920.7 - 871.3)

Volume	Invert	Avail.Storage	Storage Description
#1A	25.00'	1,355 cf	**10.33'W x 75.54'L x 6.75'H Field A** 5,269 cf Overall - 1,882 cf Embedded = 3,387 cf x 40.0% Voids
#2A	25.75'	1,882 cf	**StormTech MC-4500 +Cap** x 17 Inside #1 Effective Size= 90.4"W x 60.0"H => 26.46 sf x 4.03'L = 106.5 cf Overall Size= 100.0"W x 60.0"H x 4.33'L with 0.31' Overlap Cap Storage= +35.7 cf x 2 x 1 rows = 71.4 cf
		3,237 cf	Total Available Storage

Storage Group A created with Chamber Wizard

Device	Routing	Invert	Outlet Devices
#1	Discarded	25.00'	**8.270 in/hr Exfiltration over Horizontal area**

Discarded OutFlow Max=0.15 cfs @ 12.05 hrs HW=25.16' (Free Discharge)
1=Exfiltration (Exfiltration Controls 0.15 cfs)

Summary for Pond PSIS2: Proposed Subsurface Infiltration System 2

Inflow Area =	93,320 sf, 63.49% Impervious,	Inflow Depth = 2.45"	for 10 Year event	
Inflow =	5.30 cfs @ 12.15 hrs,	Volume=	19,079 cf	
Outflow =	0.88 cfs @ 12.77 hrs,	Volume=	19,083 cf,	Atten= 83%, Lag= 37.1 min
Discarded =	0.39 cfs @ 11.70 hrs,	Volume=	17,781 cf	
Primary =	0.49 cfs @ 12.77 hrs,	Volume=	1,302 cf	

Routing by Dyn-Stor-Ind method, Time Span= 0.00-40.00 hrs, dt= 0.05 hrs
Peak Elev= 30.31' @ 12.77 hrs Surf.Area= 2,038 sf Storage= 7,494 cf

Plug-Flow detention time= (not calculated: outflow precedes inflow)
Center-of-Mass det. time= 168.8 min (1,005.8 - 837.1)

Volume	Invert	Avail.Storage	Storage Description
#1A	25.00'	3,373 cf	**28.50'W x 71.52'L x 6.75'H Field A** 13,758 cf Overall - 5,326 cf Embedded = 8,432 cf x 40.0% Voids
#2A	25.75'	5,326 cf	**StormTech MC-4500 +Cap** x 48 Inside #1 Effective Size= 90.4"W x 60.0"H => 26.46 sf x 4.03'L = 106.5 cf Overall Size= 100.0"W x 60.0"H x 4.33'L with 0.31' Overlap 3 Rows of 16 Chambers Cap Storage= +35.7 cf x 2 x 3 rows = 214.2 cf
		8,699 cf	Total Available Storage

Storage Group A created with Chamber Wizard

Device	Routing	Invert	Outlet Devices
#1	Discarded	25.00'	**8.270 in/hr Exfiltration over Horizontal area**
#2	Primary	30.00'	**18.0" Round Culvert** L= 30.0' CPP, square edge headwall, Ke= 0.500 Inlet / Outlet Invert= 30.00' / 29.50' S= 0.0167 '/' Cc= 0.900 n= 0.010, Flow Area= 1.77 sf

Discarded OutFlow Max=0.39 cfs @ 11.70 hrs HW=25.09' (Free Discharge)
└**1=Exfiltration** (Exfiltration Controls 0.39 cfs)

Primary OutFlow Max=0.49 cfs @ 12.77 hrs HW=30.31' TW=0.00' (Dynamic Tailwater)
└**2=Culvert** (Inlet Controls 0.49 cfs @ 1.88 fps)

Summary for Pond PSIS3: Proposed Subsurface Infiltration System 3

Inflow Area =	17,215 sf, 34.27% Impervious,	Inflow Depth =	1.18"	for 10 Year event
Inflow =	0.40 cfs @ 12.17 hrs, Volume=	1,690 cf		
Outflow =	0.09 cfs @ 12.05 hrs, Volume=	1,694 cf,	Atten= 79%,	Lag= 0.0 min
Discarded =	0.09 cfs @ 12.05 hrs, Volume=	1,694 cf		

Routing by Dyn-Stor-Ind method, Time Span= 0.00-40.00 hrs, dt= 0.05 hrs
Peak Elev= 26.54' @ 12.83 hrs Surf.Area= 448 sf Storage= 412 cf

Plug-Flow detention time= (not calculated: outflow precedes inflow)
Center-of-Mass det. time= 34.3 min (918.6 - 884.3)

Volume	Invert	Avail.Storage	Storage Description
#1A	25.00'	797 cf	**10.33'W x 43.34'L x 6.75'H Field A** 3,023 cf Overall - 1,030 cf Embedded = 1,993 cf x 40.0% Voids
#2A	25.75'	1,030 cf	**StormTech MC-4500 +Cap** x 9 Inside #1 Effective Size= 90.4"W x 60.0"H => 26.46 sf x 4.03'L = 106.5 cf Overall Size= 100.0"W x 60.0"H x 4.33'L with 0.31' Overlap Cap Storage= +35.7 cf x 2 x 1 rows = 71.4 cf
		1,827 cf	Total Available Storage

Storage Group A created with Chamber Wizard

Device	Routing	Invert	Outlet Devices
#1	Discarded	25.00'	**8.270 in/hr Exfiltration over Horizontal area**

Discarded OutFlow Max=0.09 cfs @ 12.05 hrs HW=25.11' (Free Discharge)
└**1=Exfiltration** (Exfiltration Controls 0.09 cfs)

Summary for Link 1L: Add to POC1

Inflow Area =	189,617 sf,	34.45% Impervious,	Inflow Depth =	0.25"	for 10 Year event
Inflow =	0.64 cfs @	12.76 hrs, Volume=	3,920 cf		
Primary =	0.64 cfs @	12.76 hrs, Volume=	3,920 cf,	Atten= 0%,	Lag= 0.0 min

Primary outflow = Inflow, Time Span= 0.00-40.00 hrs, dt= 0.05 hrs

Summary for Link ADD: (new Link)

Inflow Area =	57,337 sf,	41.80% Impervious,	Inflow Depth =	1.54"	for 10 Year event
Inflow =	2.13 cfs @	12.10 hrs, Volume=	7,341 cf		
Primary =	2.13 cfs @	12.10 hrs, Volume=	7,341 cf,	Atten= 0%,	Lag= 0.0 min

Primary outflow = Inflow, Time Span= 0.00-40.00 hrs, dt= 0.05 hrs

Time span=0.00-40.00 hrs, dt=0.05 hrs, 801 points
Runoff by SCS TR-20 method, UH=SCS, Weighted-CN
Reach routing by Dyn-Stor-Ind method - Pond routing by Dyn-Stor-Ind method

Subcatchment PR1: South - Undeveloped Runoff Area=96,297 sf 6.31% Impervious Runoff Depth=0.60"
Flow Length=365' Tc=11.4 min UI Adjusted CN=43 Runoff=0.64 cfs 4,850 cf

Subcatchment PR2: Parking and Drives Runoff Area=93,320 sf 63.49% Impervious Runoff Depth=3.21"
Flow Length=392' Tc=10.1 min CN=76 Runoff=6.94 cfs 24,949 cf

Subcatchment PR3: Buildings and Northerly O/S Runoff Area=29,748 sf 40.08% Impervious Runoff Depth=2.04"
Flow Length=272' Slope=0.0100 '/' Tc=12.5 min CN=63 Runoff=1.25 cfs 5,052 cf

Subcatchment PR4: Building and O/S Lot 1 Runoff Area=17,215 sf 34.27% Impervious Runoff Depth=1.71"
Flow Length=67' Slope=0.0100 '/' Tc=10.4 min CN=59 Runoff=0.63 cfs 2,456 cf

Subcatchment PR5: Northerly Side of Project to Old Runoff Area=12,291 sf 74.09% Impervious Runoff Depth=3.91"
Tc=6.0 min CN=83 Runoff=1.25 cfs 4,001 cf

Subcatchment PR6: Road A - East of project Runoff Area=45,046 sf 32.99% Impervious Runoff Depth=1.63"
Tc=6.0 min CN=58 Runoff=1.79 cfs 6,132 cf

Pond POND1: Lot 3/4 Yard Drain Peak Elev=34.17' Storage=93 cf Inflow=1.25 cfs 5,052 cf
Discarded=0.08 cfs 369 cf Primary=1.07 cfs 4,683 cf Outflow=1.15 cfs 5,052 cf

Pond PSIS1: Proposed Subsurface Infiltration System 1 Peak Elev=28.11' Storage=1,673 cf Inflow=1.07 cfs 4,683 cf
Outflow=0.15 cfs 4,690 cf

Pond PSIS2: Proposed Subsurface Infiltration System Peak Elev=30.82' Storage=7,940 cf Inflow=6.94 cfs 24,949 cf
Discarded=0.39 cfs 19,678 cf Primary=3.04 cfs 5,277 cf Outflow=3.44 cfs 24,955 cf

Pond PSIS3: Proposed Subsurface Infiltration System 3 Peak Elev=27.67' Storage=799 cf Inflow=0.63 cfs 2,456 cf
Outflow=0.09 cfs 2,462 cf

Link 1L: Add to POC1 Inflow=3.67 cfs 10,128 cf
Primary=3.67 cfs 10,128 cf

Link ADD: (new Link) Inflow=3.03 cfs 10,133 cf
Primary=3.03 cfs 10,133 cf

Total Runoff Area = 293,917 sf Runoff Volume = 47,440 cf Average Runoff Depth = 1.94"
63.56% Pervious = 186,806 sf 36.44% Impervious = 107,111 sf

Summary for Subcatchment PR1: South - Undeveloped

Runoff = 0.64 cfs @ 12.34 hrs, Volume= 4,850 cf, Depth= 0.60"

Runoff by SCS TR-20 method, UH=SCS, Weighted-CN, Time Span= 0.00-40.00 hrs, dt= 0.05 hrs
Type III 24-hr 25 Year Rainfall=5.80"

Area (sf)	CN	Adj	Description
6,075	98		Unconnected pavement, HSG A
4,949	77		Newly graded area, HSG A
85,273	39		>75% Grass cover, Good, HSG A
96,297	45	43	Weighted Average, UI Adjusted
90,222			93.69% Pervious Area
6,075			6.31% Impervious Area
6,075			100.00% Unconnected

Tc (min)	Length (feet)	Slope (ft/ft)	Velocity (ft/sec)	Capacity (cfs)	Description
9.5	50	0.0120	0.09		**Sheet Flow, Sheet1** Grass: Dense n= 0.240 P2= 3.60"
1.9	315	0.0300	2.79		**Shallow Concentrated Flow, Shallow1** Unpaved Kv= 16.1 fps
11.4	365	Total			

Summary for Subcatchment PR2: Parking and Drives

Runoff = 6.94 cfs @ 12.15 hrs, Volume= 24,949 cf, Depth= 3.21"

Runoff by SCS TR-20 method, UH=SCS, Weighted-CN, Time Span= 0.00-40.00 hrs, dt= 0.05 hrs
Type III 24-hr 25 Year Rainfall=5.80"

Area (sf)	CN	Description
59,246	98	Paved parking, HSG A
34,074	39	>75% Grass cover, Good, HSG A
93,320	76	Weighted Average
34,074		36.51% Pervious Area
59,246		63.49% Impervious Area

Tc (min)	Length (feet)	Slope (ft/ft)	Velocity (ft/sec)	Capacity (cfs)	Description
7.7	50	0.0200	0.11		**Sheet Flow, Sheet** Grass: Dense n= 0.240 P2= 3.60"
0.6	127	0.0500	3.60		**Shallow Concentrated Flow, Shallow1** Unpaved Kv= 16.1 fps
1.8	215	0.0100	2.03		**Shallow Concentrated Flow, Shallow2** Paved Kv= 20.3 fps
10.1	392	Total			

Summary for Subcatchment PR3: Buildings and Northerly O/S

Runoff = 1.25 cfs @ 12.19 hrs, Volume= 5,052 cf, Depth= 2.04"

Runoff by SCS TR-20 method, UH=SCS, Weighted-CN, Time Span= 0.00-40.00 hrs, dt= 0.05 hrs
Type III 24-hr 25 Year Rainfall=5.80"

Area (sf)	CN	Description
11,922	98	Unconnected roofs, HSG A
17,826	39	>75% Grass cover, Good, HSG A
29,748	63	Weighted Average
17,826		59.92% Pervious Area
11,922		40.08% Impervious Area
11,922		100.00% Unconnected

Tc (min)	Length (feet)	Slope (ft/ft)	Velocity (ft/sec)	Capacity (cfs)	Description
10.2	50	0.0100	0.08		**Sheet Flow, Sheet** Grass: Dense n= 0.240 P2= 3.60"
2.3	222	0.0100	1.61		**Shallow Concentrated Flow, Shallow** Unpaved Kv= 16.1 fps
12.5	272	Total			

Summary for Subcatchment PR4: Building and O/S Lot 1

Runoff = 0.63 cfs @ 12.16 hrs, Volume= 2,456 cf, Depth= 1.71"

Runoff by SCS TR-20 method, UH=SCS, Weighted-CN, Time Span= 0.00-40.00 hrs, dt= 0.05 hrs
Type III 24-hr 25 Year Rainfall=5.80"

Area (sf)	CN	Description
5,900	98	Roofs, HSG A
11,315	39	>75% Grass cover, Good, HSG A
17,215	59	Weighted Average
11,315		65.73% Pervious Area
5,900		34.27% Impervious Area

Tc (min)	Length (feet)	Slope (ft/ft)	Velocity (ft/sec)	Capacity (cfs)	Description
10.2	50	0.0100	0.08		**Sheet Flow, Sheet1** Grass: Dense n= 0.240 P2= 3.60"
0.2	17	0.0100	1.61		**Shallow Concentrated Flow, Shallow1** Unpaved Kv= 16.1 fps
10.4	67	Total			

Summary for Subcatchment PR5: Northerly Side of Project to Old South Rd

Runoff = 1.25 cfs @ 12.09 hrs, Volume= 4,001 cf, Depth= 3.91"

Runoff by SCS TR-20 method, UH=SCS, Weighted-CN, Time Span= 0.00-40.00 hrs, dt= 0.05 hrs
Type III 24-hr 25 Year Rainfall=5.80"

Area (sf)	CN	Description
9,106	98	Paved roads w/curbs & sewers, HSG A
3,185	39	>75% Grass cover, Good, HSG A
12,291	83	Weighted Average
3,185		25.91% Pervious Area
9,106		74.09% Impervious Area

Tc (min)	Length (feet)	Slope (ft/ft)	Velocity (ft/sec)	Capacity (cfs)	Description
6.0					**Direct Entry, Min. Tc = 0.1h**

Summary for Subcatchment PR6: Road A - East of project

Runoff = 1.79 cfs @ 12.10 hrs, Volume= 6,132 cf, Depth= 1.63"

Runoff by SCS TR-20 method, UH=SCS, Weighted-CN, Time Span= 0.00-40.00 hrs, dt= 0.05 hrs
Type III 24-hr 25 Year Rainfall=5.80"

Area (sf)	CN	Description
14,862	98	Paved roads w/curbs & sewers, HSG A
30,184	39	>75% Grass cover, Good, HSG A
45,046	58	Weighted Average
30,184		67.01% Pervious Area
14,862		32.99% Impervious Area

Tc (min)	Length (feet)	Slope (ft/ft)	Velocity (ft/sec)	Capacity (cfs)	Description
6.0					**Direct Entry, Min. Tc = 0.1h**

Summary for Pond POND1: Lot 3/4 Yard Drain

Inflow Area = 29,748 sf, 40.08% Impervious, Inflow Depth = 2.04" for 25 Year event
Inflow = 1.25 cfs @ 12.19 hrs, Volume= 5,052 cf
Outflow = 1.15 cfs @ 12.25 hrs, Volume= 5,052 cf, Atten= 8%, Lag= 3.6 min
Discarded = 0.08 cfs @ 12.25 hrs, Volume= 369 cf
Primary = 1.07 cfs @ 12.25 hrs, Volume= 4,683 cf

Routing by Dyn-Stor-Ind method, Time Span= 0.00-40.00 hrs, dt= 0.05 hrs
Peak Elev= 34.17' @ 12.25 hrs Surf.Area= 432 sf Storage= 93 cf

Plug-Flow detention time= 0.4 min calculated for 5,046 cf (100% of inflow)
Center-of-Mass det. time= 0.4 min (863.5 - 863.1)

Volume	Invert	Avail.Storage	Storage Description
#1	33.75'	1,004 cf	**Custom Stage Data (Prismatic)** Listed below (Recalc)

Elevation (feet)	Surf.Area (sq-ft)	Inc.Store (cubic-feet)	Cum.Store (cubic-feet)
33.75	4	0	0
34.00	275	35	35
34.50	750	256	291
35.00	2,100	713	1,004

Device	Routing	Invert	Outlet Devices
#1	Discarded	33.75'	**8.270 in/hr Exfiltration over Surface area**
#2	Primary	33.75'	**Nyoplast 10" Dome Grate Inlet** Head (feet) 0.00 0.10 0.20 1.00 Disch. (cfs) 0.000 0.280 0.800 1.800

Discarded OutFlow Max=0.08 cfs @ 12.25 hrs HW=34.16' (Free Discharge)
└**1=Exfiltration** (Exfiltration Controls 0.08 cfs)

Primary OutFlow Max=1.07 cfs @ 12.25 hrs HW=34.16' TW=26.48' (Dynamic Tailwater)
└**2=Nyoplast 10" Dome Grate Inlet** (Custom Controls 1.07 cfs)

Summary for Pond PSIS1: Proposed Subsurface Infiltration System 1

Inflow Area =	29,748 sf,	40.08% Impervious,	Inflow Depth =	1.89"	for 25 Year event
Inflow =	1.07 cfs @	12.25 hrs, Volume=	4,683 cf		
Outflow =	0.15 cfs @	11.90 hrs, Volume=	4,690 cf,	Atten= 86%,	Lag= 0.0 min
Discarded =	0.15 cfs @	11.90 hrs, Volume=	4,690 cf		

Routing by Dyn-Stor-Ind method, Time Span= 0.00-40.00 hrs, dt= 0.05 hrs
Peak Elev= 28.11' @ 13.38 hrs Surf.Area= 781 sf Storage= 1,673 cf

Plug-Flow detention time= (not calculated: outflow precedes inflow)
Center-of-Mass det. time= 101.1 min (962.8 - 861.7)

Volume	Invert	Avail.Storage	Storage Description
#1A	25.00'	1,355 cf	**10.33'W x 75.54'L x 6.75'H Field A** 5,269 cf Overall - 1,882 cf Embedded = 3,387 cf x 40.0% Voids
#2A	25.75'	1,882 cf	**StormTech MC-4500 +Cap** x 17 Inside #1 Effective Size= 90.4"W x 60.0"H => 26.46 sf x 4.03'L = 106.5 cf Overall Size= 100.0"W x 60.0"H x 4.33'L with 0.31' Overlap Cap Storage= +35.7 cf x 2 x 1 rows = 71.4 cf
		3,237 cf	Total Available Storage

Storage Group A created with Chamber Wizard

Device	Routing	Invert	Outlet Devices
#1	Discarded	25.00'	**8.270 in/hr Exfiltration over Horizontal area**

Discarded OutFlow Max=0.15 cfs @ 11.90 hrs HW=25.07' (Free Discharge)
└**1=Exfiltration** (Exfiltration Controls 0.15 cfs)

Summary for Pond PSIS2: Proposed Subsurface Infiltration System 2

Inflow Area =	93,320 sf,	63.49% Impervious,	Inflow Depth =	3.21"	for 25 Year event
Inflow =	6.94 cfs @	12.15 hrs, Volume=	24,949 cf		
Outflow =	3.44 cfs @	12.41 hrs, Volume=	24,955 cf,	Atten= 51%,	Lag= 15.6 min
Discarded =	0.39 cfs @	11.50 hrs, Volume=	19,678 cf		
Primary =	3.04 cfs @	12.41 hrs, Volume=	5,277 cf		

Routing by Dyn-Stor-Ind method, Time Span= 0.00-40.00 hrs, dt= 0.05 hrs
Peak Elev= 30.82' @ 12.41 hrs Surf.Area= 2,038 sf Storage= 7,940 cf

Plug-Flow detention time= (not calculated: outflow precedes inflow)
Center-of-Mass det. time= 148.1 min (977.4 - 829.3)

Volume	Invert	Avail.Storage	Storage Description
#1A	25.00'	3,373 cf	**28.50'W x 71.52'L x 6.75'H Field A** 13,758 cf Overall - 5,326 cf Embedded = 8,432 cf x 40.0% Voids
#2A	25.75'	5,326 cf	**StormTech MC-4500 +Cap** x 48 Inside #1 Effective Size= 90.4"W x 60.0"H => 26.46 sf x 4.03'L = 106.5 cf Overall Size= 100.0"W x 60.0"H x 4.33'L with 0.31' Overlap 3 Rows of 16 Chambers Cap Storage= +35.7 cf x 2 x 3 rows = 214.2 cf
		8,699 cf	Total Available Storage

Storage Group A created with Chamber Wizard

Device	Routing	Invert	Outlet Devices
#1	Discarded	25.00'	**8.270 in/hr Exfiltration over Horizontal area**
#2	Primary	30.00'	**18.0" Round Culvert** L= 30.0' CPP, square edge headwall, Ke= 0.500 Inlet / Outlet Invert= 30.00' / 29.50' S= 0.0167 '/' Cc= 0.900 n= 0.010, Flow Area= 1.77 sf

Discarded OutFlow Max=0.39 cfs @ 11.50 hrs HW=25.09' (Free Discharge)
1=Exfiltration (Exfiltration Controls 0.39 cfs)

Primary OutFlow Max=3.00 cfs @ 12.41 hrs HW=30.81' TW=0.00' (Dynamic Tailwater)
2=Culvert (Inlet Controls 3.00 cfs @ 3.07 fps)

Summary for Pond PSIS3: Proposed Subsurface Infiltration System 3

Inflow Area =	17,215 sf, 34.27% Impervious,	Inflow Depth = 1.71"	for 25 Year event	
Inflow =	0.63 cfs @ 12.16 hrs,	Volume=	2,456 cf	
Outflow =	0.09 cfs @ 11.95 hrs,	Volume=	2,462 cf,	Atten= 86%, Lag= 0.0 min
Discarded =	0.09 cfs @ 11.95 hrs,	Volume=	2,462 cf	

Routing by Dyn-Stor-Ind method, Time Span= 0.00-40.00 hrs, dt= 0.05 hrs
Peak Elev= 27.67' @ 13.22 hrs Surf.Area= 448 sf Storage= 799 cf

Plug-Flow detention time= (not calculated: outflow precedes inflow)
Center-of-Mass det. time= 82.6 min (954.5 - 871.9)

Volume	Invert	Avail.Storage	Storage Description
#1A	25.00'	797 cf	**10.33'W x 43.34'L x 6.75'H Field A** 3,023 cf Overall - 1,030 cf Embedded = 1,993 cf x 40.0% Voids
#2A	25.75'	1,030 cf	**StormTech MC-4500 +Cap** x 9 Inside #1 Effective Size= 90.4"W x 60.0"H => 26.46 sf x 4.03'L = 106.5 cf Overall Size= 100.0"W x 60.0"H x 4.33'L with 0.31' Overlap Cap Storage= +35.7 cf x 2 x 1 rows = 71.4 cf
		1,827 cf	Total Available Storage

Storage Group A created with Chamber Wizard

Device	Routing	Invert	Outlet Devices
#1	Discarded	25.00'	**8.270 in/hr Exfiltration over Horizontal area**

Discarded OutFlow Max=0.09 cfs @ 11.95 hrs HW=25.10' (Free Discharge)
1=Exfiltration (Exfiltration Controls 0.09 cfs)

Summary for Link 1L: Add to POC1

Inflow Area =	189,617 sf,	34.45% Impervious,	Inflow Depth = 0.64"	for 25 Year event
Inflow =	3.67 cfs @	12.40 hrs, Volume=	10,128 cf	
Primary =	3.67 cfs @	12.40 hrs, Volume=	10,128 cf, Atten= 0%, Lag= 0.0 min	

Primary outflow = Inflow, Time Span= 0.00-40.00 hrs, dt= 0.05 hrs

Summary for Link ADD: (new Link)

Inflow Area =	57,337 sf,	41.80% Impervious,	Inflow Depth = 2.12"	for 25 Year event
Inflow =	3.03 cfs @	12.10 hrs, Volume=	10,133 cf	
Primary =	3.03 cfs @	12.10 hrs, Volume=	10,133 cf, Atten= 0%, Lag= 0.0 min	

Primary outflow = Inflow, Time Span= 0.00-40.00 hrs, dt= 0.05 hrs

Time span=0.00-40.00 hrs, dt=0.05 hrs, 801 points
Runoff by SCS TR-20 method, UH=SCS, Weighted-CN
Reach routing by Dyn-Stor-Ind method - Pond routing by Dyn-Stor-Ind method

Subcatchment PR1: South - Undeveloped Runoff Area=96,297 sf 6.31% Impervious Runoff Depth=0.87"
Flow Length=365' Tc=11.4 min UI Adjusted CN=43 Runoff=1.11 cfs 6,950 cf

Subcatchment PR2: Parking and Drives Runoff Area=93,320 sf 63.49% Impervious Runoff Depth=3.82"
Flow Length=392' Tc=10.1 min CN=76 Runoff=8.25 cfs 29,671 cf

Subcatchment PR3: Buildings and Northerly O/S Runoff Area=29,748 sf 40.08% Impervious Runoff Depth=2.53"
Flow Length=272' Slope=0.0100 '/' Tc=12.5 min CN=63 Runoff=1.58 cfs 6,278 cf

Subcatchment PR4: Building and O/S Lot 1 Runoff Area=17,215 sf 34.27% Impervious Runoff Depth=2.17"
Flow Length=67' Slope=0.0100 '/' Tc=10.4 min CN=59 Runoff=0.81 cfs 3,107 cf

Subcatchment PR5: Northerly Side of Project to Old Runoff Area=12,291 sf 74.09% Impervious Runoff Depth=4.56"
Tc=6.0 min CN=83 Runoff=1.45 cfs 4,668 cf

Subcatchment PR6: Road A - East of project Runoff Area=45,046 sf 32.99% Impervious Runoff Depth=2.08"
Tc=6.0 min CN=58 Runoff=2.34 cfs 7,793 cf

Pond POND1: Lot 3/4 Yard Drain Peak Elev=34.34' Storage=181 cf Inflow=1.58 cfs 6,278 cf
Discarded=0.11 cfs 467 cf Primary=1.28 cfs 5,811 cf Outflow=1.40 cfs 6,278 cf

Pond PSIS1: Proposed Subsurface Infiltration System 1 Peak Elev=29.33' Storage=2,337 cf Inflow=1.28 cfs 5,811 cf
Outflow=0.15 cfs 5,814 cf

Pond PSIS2: Proposed Subsurface Infiltration System Peak Elev=31.11' Storage=8,180 cf Inflow=8.25 cfs 29,671 cf
Discarded=0.39 cfs 21,037 cf Primary=5.06 cfs 8,666 cf Outflow=5.45 cfs 29,703 cf

Pond PSIS3: Proposed Subsurface Infiltration System 3 Peak Elev=28.86' Storage=1,176 cf Inflow=0.81 cfs 3,107 cf
Outflow=0.09 cfs 3,108 cf

Link 1L: Add to POC1 Inflow=6.13 cfs 15,616 cf
Primary=6.13 cfs 15,616 cf

Link ADD: (new Link) Inflow=3.79 cfs 12,461 cf
Primary=3.79 cfs 12,461 cf

Total Runoff Area = 293,917 sf Runoff Volume = 58,466 cf Average Runoff Depth = 2.39"
63.56% Pervious = 186,806 sf 36.44% Impervious = 107,111 sf

Summary for Subcatchment PR1: South - Undeveloped

Runoff = 1.11 cfs @ 12.24 hrs, Volume= 6,950 cf, Depth= 0.87"

Runoff by SCS TR-20 method, UH=SCS, Weighted-CN, Time Span= 0.00-40.00 hrs, dt= 0.05 hrs
Type III 24-hr 50 Year Rainfall=6.50"

Area (sf)	CN	Adj	Description
6,075	98		Unconnected pavement, HSG A
4,949	77		Newly graded area, HSG A
85,273	39		>75% Grass cover, Good, HSG A
96,297	45	43	Weighted Average, UI Adjusted
90,222			93.69% Pervious Area
6,075			6.31% Impervious Area
6,075			100.00% Unconnected

Tc (min)	Length (feet)	Slope (ft/ft)	Velocity (ft/sec)	Capacity (cfs)	Description
9.5	50	0.0120	0.09		**Sheet Flow, Sheet1** Grass: Dense n= 0.240 P2= 3.60"
1.9	315	0.0300	2.79		**Shallow Concentrated Flow, Shallow1** Unpaved Kv= 16.1 fps
11.4	365	Total			

Summary for Subcatchment PR2: Parking and Drives

Runoff = 8.25 cfs @ 12.14 hrs, Volume= 29,671 cf, Depth= 3.82"

Runoff by SCS TR-20 method, UH=SCS, Weighted-CN, Time Span= 0.00-40.00 hrs, dt= 0.05 hrs
Type III 24-hr 50 Year Rainfall=6.50"

Area (sf)	CN	Description
59,246	98	Paved parking, HSG A
34,074	39	>75% Grass cover, Good, HSG A
93,320	76	Weighted Average
34,074		36.51% Pervious Area
59,246		63.49% Impervious Area

Tc (min)	Length (feet)	Slope (ft/ft)	Velocity (ft/sec)	Capacity (cfs)	Description
7.7	50	0.0200	0.11		**Sheet Flow, Sheet** Grass: Dense n= 0.240 P2= 3.60"
0.6	127	0.0500	3.60		**Shallow Concentrated Flow, Shallow1** Unpaved Kv= 16.1 fps
1.8	215	0.0100	2.03		**Shallow Concentrated Flow, Shallow2** Paved Kv= 20.3 fps
10.1	392	Total			

Summary for Subcatchment PR3: Buildings and Northerly O/S

Runoff = 1.58 cfs @ 12.18 hrs, Volume= 6,278 cf, Depth= 2.53"

Runoff by SCS TR-20 method, UH=SCS, Weighted-CN, Time Span= 0.00-40.00 hrs, dt= 0.05 hrs
Type III 24-hr 50 Year Rainfall=6.50"

Area (sf)	CN	Description
11,922	98	Unconnected roofs, HSG A
17,826	39	>75% Grass cover, Good, HSG A
29,748	63	Weighted Average
17,826		59.92% Pervious Area
11,922		40.08% Impervious Area
11,922		100.00% Unconnected

Tc (min)	Length (feet)	Slope (ft/ft)	Velocity (ft/sec)	Capacity (cfs)	Description
10.2	50	0.0100	0.08		**Sheet Flow, Sheet** Grass: Dense n= 0.240 P2= 3.60"
2.3	222	0.0100	1.61		**Shallow Concentrated Flow, Shallow** Unpaved Kv= 16.1 fps
12.5	272	Total			

Summary for Subcatchment PR4: Building and O/S Lot 1

Runoff = 0.81 cfs @ 12.16 hrs, Volume= 3,107 cf, Depth= 2.17"

Runoff by SCS TR-20 method, UH=SCS, Weighted-CN, Time Span= 0.00-40.00 hrs, dt= 0.05 hrs
Type III 24-hr 50 Year Rainfall=6.50"

Area (sf)	CN	Description
5,900	98	Roofs, HSG A
11,315	39	>75% Grass cover, Good, HSG A
17,215	59	Weighted Average
11,315		65.73% Pervious Area
5,900		34.27% Impervious Area

Tc (min)	Length (feet)	Slope (ft/ft)	Velocity (ft/sec)	Capacity (cfs)	Description
10.2	50	0.0100	0.08		**Sheet Flow, Sheet1** Grass: Dense n= 0.240 P2= 3.60"
0.2	17	0.0100	1.61		**Shallow Concentrated Flow, Shallow1** Unpaved Kv= 16.1 fps
10.4	67	Total			

Summary for Subcatchment PR5: Northerly Side of Project to Old South Rd

Runoff = 1.45 cfs @ 12.09 hrs, Volume= 4,668 cf, Depth= 4.56"

Runoff by SCS TR-20 method, UH=SCS, Weighted-CN, Time Span= 0.00-40.00 hrs, dt= 0.05 hrs
Type III 24-hr 50 Year Rainfall=6.50"

Area (sf)	CN	Description
9,106	98	Paved roads w/curbs & sewers, HSG A
3,185	39	>75% Grass cover, Good, HSG A
12,291	83	Weighted Average
3,185		25.91% Pervious Area
9,106		74.09% Impervious Area

Tc (min)	Length (feet)	Slope (ft/ft)	Velocity (ft/sec)	Capacity (cfs)	Description
6.0					**Direct Entry, Min. Tc = 0.1h**

Summary for Subcatchment PR6: Road A - East of project

Runoff = 2.34 cfs @ 12.10 hrs, Volume= 7,793 cf, Depth= 2.08"

Runoff by SCS TR-20 method, UH=SCS, Weighted-CN, Time Span= 0.00-40.00 hrs, dt= 0.05 hrs
Type III 24-hr 50 Year Rainfall=6.50"

Area (sf)	CN	Description
14,862	98	Paved roads w/curbs & sewers, HSG A
30,184	39	>75% Grass cover, Good, HSG A
45,046	58	Weighted Average
30,184		67.01% Pervious Area
14,862		32.99% Impervious Area

Tc (min)	Length (feet)	Slope (ft/ft)	Velocity (ft/sec)	Capacity (cfs)	Description
6.0					**Direct Entry, Min. Tc = 0.1h**

Summary for Pond POND1: Lot 3/4 Yard Drain

Inflow Area = 29,748 sf, 40.08% Impervious, Inflow Depth = 2.53" for 50 Year event
Inflow = 1.58 cfs @ 12.18 hrs, Volume= 6,278 cf
Outflow = 1.40 cfs @ 12.26 hrs, Volume= 6,278 cf, Atten= 12%, Lag= 4.6 min
Discarded = 0.11 cfs @ 12.26 hrs, Volume= 467 cf
Primary = 1.28 cfs @ 12.26 hrs, Volume= 5,811 cf

Routing by Dyn-Stor-Ind method, Time Span= 0.00-40.00 hrs, dt= 0.05 hrs
Peak Elev= 34.34' @ 12.26 hrs Surf.Area= 594 sf Storage= 181 cf

Plug-Flow detention time= 0.6 min calculated for 6,270 cf (100% of inflow)
Center-of-Mass det. time= 0.6 min (857.2 - 856.6)

Volume	Invert	Avail.Storage	Storage Description
#1	33.75'	1,004 cf	**Custom Stage Data (Prismatic)** Listed below (Recalc)

Elevation (feet)	Surf.Area (sq-ft)	Inc.Store (cubic-feet)	Cum.Store (cubic-feet)
33.75	4	0	0
34.00	275	35	35
34.50	750	256	291
35.00	2,100	713	1,004

Device	Routing	Invert	Outlet Devices
#1	Discarded	33.75'	**8.270 in/hr Exfiltration over Surface area**
#2	Primary	33.75'	**Nyoplast 10" Dome Grate Inlet** Head (feet) 0.00 0.10 0.20 1.00 Disch. (cfs) 0.000 0.280 0.800 1.800

Discarded OutFlow Max=0.11 cfs @ 12.26 hrs HW=34.33' (Free Discharge)
1=Exfiltration (Exfiltration Controls 0.11 cfs)

Primary OutFlow Max=1.28 cfs @ 12.26 hrs HW=34.33' TW=26.93' (Dynamic Tailwater)
2=Nyoplast 10" Dome Grate Inlet (Custom Controls 1.28 cfs)

Summary for Pond PSIS1: Proposed Subsurface Infiltration System 1

Inflow Area =	29,748 sf,	40.08% Impervious,	Inflow Depth =	2.34"	for 50 Year event
Inflow =	1.28 cfs @	12.26 hrs,	Volume=	5,811 cf	
Outflow =	0.15 cfs @	11.85 hrs,	Volume=	5,814 cf,	Atten= 88%, Lag= 0.0 min
Discarded =	0.15 cfs @	11.85 hrs,	Volume=	5,814 cf	

Routing by Dyn-Stor-Ind method, Time Span= 0.00-40.00 hrs, dt= 0.05 hrs
Peak Elev= 29.33' @ 13.92 hrs Surf.Area= 781 sf Storage= 2,337 cf

Plug-Flow detention time= (not calculated: outflow precedes inflow)
Center-of-Mass det. time= 149.5 min (1,005.5 - 856.0)

Volume	Invert	Avail.Storage	Storage Description
#1A	25.00'	1,355 cf	**10.33'W x 75.54'L x 6.75'H Field A** 5,269 cf Overall - 1,882 cf Embedded = 3,387 cf x 40.0% Voids
#2A	25.75'	1,882 cf	**StormTech MC-4500 +Cap** x 17 Inside #1 Effective Size= 90.4"W x 60.0"H => 26.46 sf x 4.03'L = 106.5 cf Overall Size= 100.0"W x 60.0"H x 4.33'L with 0.31' Overlap Cap Storage= +35.7 cf x 2 x 1 rows = 71.4 cf
		3,237 cf	Total Available Storage

Storage Group A created with Chamber Wizard

Device	Routing	Invert	Outlet Devices
#1	Discarded	25.00'	**8.270 in/hr Exfiltration over Horizontal area**

Discarded OutFlow Max=0.15 cfs @ 11.85 hrs HW=25.10' (Free Discharge)
1=Exfiltration (Exfiltration Controls 0.15 cfs)

Summary for Pond PSIS2: Proposed Subsurface Infiltration System 2

Inflow Area =	93,320 sf,	63.49% Impervious,	Inflow Depth =	3.82"	for 50 Year event
Inflow =	8.25 cfs @	12.14 hrs,	Volume=	29,671 cf	
Outflow =	5.45 cfs @	12.30 hrs,	Volume=	29,703 cf,	Atten= 34%, Lag= 9.6 min
Discarded =	0.39 cfs @	11.30 hrs,	Volume=	21,037 cf	
Primary =	5.06 cfs @	12.30 hrs,	Volume=	8,666 cf	

Routing by Dyn-Stor-Ind method, Time Span= 0.00-40.00 hrs, dt= 0.05 hrs
Peak Elev= 31.11' @ 12.30 hrs Surf.Area= 2,038 sf Storage= 8,180 cf

Plug-Flow detention time= (not calculated: outflow precedes inflow)
Center-of-Mass det. time= 135.7 min (960.1 - 824.4)

Volume	Invert	Avail.Storage	Storage Description
#1A	25.00'	3,373 cf	**28.50'W x 71.52'L x 6.75'H Field A** 13,758 cf Overall - 5,326 cf Embedded = 8,432 cf x 40.0% Voids
#2A	25.75'	5,326 cf	**StormTech MC-4500 +Cap** x 48 Inside #1 Effective Size= 90.4"W x 60.0"H => 26.46 sf x 4.03'L = 106.5 cf Overall Size= 100.0"W x 60.0"H x 4.33'L with 0.31' Overlap 3 Rows of 16 Chambers Cap Storage= +35.7 cf x 2 x 3 rows = 214.2 cf
		8,699 cf	Total Available Storage

Storage Group A created with Chamber Wizard

Device	Routing	Invert	Outlet Devices
#1	Discarded	25.00'	**8.270 in/hr Exfiltration over Horizontal area**
#2	Primary	30.00'	**18.0" Round Culvert** L= 30.0' CPP, square edge headwall, Ke= 0.500 Inlet / Outlet Invert= 30.00' / 29.50' S= 0.0167 '/' Cc= 0.900 n= 0.010, Flow Area= 1.77 sf

Discarded OutFlow Max=0.39 cfs @ 11.30 hrs HW=25.08' (Free Discharge)
└**1=Exfiltration** (Exfiltration Controls 0.39 cfs)

Primary OutFlow Max=5.00 cfs @ 12.30 hrs HW=31.11' TW=0.00' (Dynamic Tailwater)
└**2=Culvert** (Inlet Controls 5.00 cfs @ 3.58 fps)

Summary for Pond PSIS3: Proposed Subsurface Infiltration System 3

Inflow Area =	17,215 sf, 34.27% Impervious,	Inflow Depth = 2.17"	for 50 Year event	
Inflow =	0.81 cfs @ 12.16 hrs,	Volume=	3,107 cf	
Outflow =	0.09 cfs @ 11.85 hrs,	Volume=	3,108 cf,	Atten= 89%, Lag= 0.0 min
Discarded =	0.09 cfs @ 11.85 hrs,	Volume=	3,108 cf	

Routing by Dyn-Stor-Ind method, Time Span= 0.00-40.00 hrs, dt= 0.05 hrs
Peak Elev= 28.86' @ 13.82 hrs Surf.Area= 448 sf Storage= 1,176 cf

Plug-Flow detention time= (not calculated: outflow precedes inflow)
Center-of-Mass det. time= 131.5 min (996.0 - 864.5)

Volume	Invert	Avail.Storage	Storage Description
#1A	25.00'	797 cf	**10.33'W x 43.34'L x 6.75'H Field A** 3,023 cf Overall - 1,030 cf Embedded = 1,993 cf x 40.0% Voids
#2A	25.75'	1,030 cf	**StormTech MC-4500 +Cap** x 9 Inside #1 Effective Size= 90.4"W x 60.0"H => 26.46 sf x 4.03'L = 106.5 cf Overall Size= 100.0"W x 60.0"H x 4.33'L with 0.31' Overlap Cap Storage= +35.7 cf x 2 x 1 rows = 71.4 cf
		1,827 cf	Total Available Storage

Storage Group A created with Chamber Wizard

Device	Routing	Invert	Outlet Devices
#1	Discarded	25.00'	**8.270 in/hr Exfiltration over Horizontal area**

Discarded OutFlow Max=0.09 cfs @ 11.85 hrs HW=25.07' (Free Discharge)
└**1=Exfiltration** (Exfiltration Controls 0.09 cfs)

Summary for Link 1L: Add to POC1

Inflow Area =	189,617 sf,	34.45% Impervious,	Inflow Depth = 0.99"	for 50 Year event
Inflow =	6.13 cfs @	12.30 hrs, Volume=	15,616 cf	
Primary =	6.13 cfs @	12.30 hrs, Volume=	15,616 cf, Atten= 0%, Lag= 0.0 min	

Primary outflow = Inflow, Time Span= 0.00-40.00 hrs, dt= 0.05 hrs

Summary for Link ADD: (new Link)

Inflow Area =	57,337 sf,	41.80% Impervious,	Inflow Depth = 2.61"	for 50 Year event
Inflow =	3.79 cfs @	12.10 hrs, Volume=	12,461 cf	
Primary =	3.79 cfs @	12.10 hrs, Volume=	12,461 cf, Atten= 0%, Lag= 0.0 min	

Primary outflow = Inflow, Time Span= 0.00-40.00 hrs, dt= 0.05 hrs

Time span=0.00-40.00 hrs, dt=0.05 hrs, 801 points
Runoff by SCS TR-20 method, UH=SCS, Weighted-CN
Reach routing by Dyn-Stor-Ind method - Pond routing by Dyn-Stor-Ind method

Subcatchment PR1: South - Undeveloped Runoff Area=96,297 sf 6.31% Impervious Runoff Depth=1.16"
Flow Length=365' Tc=11.4 min UI Adjusted CN=43 Runoff=1.75 cfs 9,326 cf

Subcatchment PR2: Parking and Drives Runoff Area=93,320 sf 63.49% Impervious Runoff Depth=4.44"
Flow Length=392' Tc=10.1 min CN=76 Runoff=9.57 cfs 34,496 cf

Subcatchment PR3: Buildings and Northerly O/S Runoff Area=29,748 sf 40.08% Impervious Runoff Depth=3.05"
Flow Length=272' Slope=0.0100 '/' Tc=12.5 min CN=63 Runoff=1.92 cfs 7,564 cf

Subcatchment PR4: Building and O/S Lot 1 Runoff Area=17,215 sf 34.27% Impervious Runoff Depth=2.65"
Flow Length=67' Slope=0.0100 '/' Tc=10.4 min CN=59 Runoff=1.01 cfs 3,796 cf

Subcatchment PR5: Northerly Side of Project to Old Runoff Area=12,291 sf 74.09% Impervious Runoff Depth=5.22"
Tc=6.0 min CN=83 Runoff=1.65 cfs 5,343 cf

Subcatchment PR6: Road A - East of project Runoff Area=45,046 sf 32.99% Impervious Runoff Depth=2.55"
Tc=6.0 min CN=58 Runoff=2.92 cfs 9,558 cf

Pond POND1: Lot 3/4 Yard Drain Peak Elev=34.50' Storage=293 cf Inflow=1.92 cfs 7,564 cf
Discarded=0.14 cfs 575 cf Primary=1.49 cfs 6,989 cf Outflow=1.63 cfs 7,564 cf

Pond PSIS1: Proposed Subsurface Infiltration System 1 Peak Elev=31.24' Storage=3,077 cf Inflow=1.49 cfs 6,989 cf
Outflow=0.15 cfs 6,990 cf

Pond PSIS2: Proposed Subsurface Infiltration System Peak Elev=31.45' Storage=8,450 cf Inflow=9.57 cfs 34,496 cf
Discarded=0.39 cfs 22,242 cf Primary=7.15 cfs 12,268 cf Outflow=7.54 cfs 34,509 cf

Pond PSIS3: Proposed Subsurface Infiltration System 3 Peak Elev=30.55' Storage=1,612 cf Inflow=1.01 cfs 3,796 cf
Outflow=0.09 cfs 3,800 cf

Link 1L: Add to POC1 Inflow=8.84 cfs 21,594 cf
Primary=8.84 cfs 21,594 cf

Link ADD: (new Link) Inflow=4.57 cfs 14,901 cf
Primary=4.57 cfs 14,901 cf

Total Runoff Area = 293,917 sf Runoff Volume = 70,083 cf Average Runoff Depth = 2.86"
63.56% Pervious = 186,806 sf 36.44% Impervious = 107,111 sf

Summary for Subcatchment PR1: South - Undeveloped

Runoff = 1.75 cfs @ 12.21 hrs, Volume= 9,326 cf, Depth= 1.16"

Runoff by SCS TR-20 method, UH=SCS, Weighted-CN, Time Span= 0.00-40.00 hrs, dt= 0.05 hrs
Type III 24-hr 100 Year Rainfall=7.20"

Area (sf)	CN	Adj	Description
6,075	98		Unconnected pavement, HSG A
4,949	77		Newly graded area, HSG A
85,273	39		>75% Grass cover, Good, HSG A
96,297	45	43	Weighted Average, UI Adjusted
90,222			93.69% Pervious Area
6,075			6.31% Impervious Area
6,075			100.00% Unconnected

Tc (min)	Length (feet)	Slope (ft/ft)	Velocity (ft/sec)	Capacity (cfs)	Description
9.5	50	0.0120	0.09		**Sheet Flow, Sheet1** Grass: Dense n= 0.240 P2= 3.60"
1.9	315	0.0300	2.79		**Shallow Concentrated Flow, Shallow1** Unpaved Kv= 16.1 fps
11.4	365	Total			

Summary for Subcatchment PR2: Parking and Drives

Runoff = 9.57 cfs @ 12.14 hrs, Volume= 34,496 cf, Depth= 4.44"

Runoff by SCS TR-20 method, UH=SCS, Weighted-CN, Time Span= 0.00-40.00 hrs, dt= 0.05 hrs
Type III 24-hr 100 Year Rainfall=7.20"

Area (sf)	CN	Description
59,246	98	Paved parking, HSG A
34,074	39	>75% Grass cover, Good, HSG A
93,320	76	Weighted Average
34,074		36.51% Pervious Area
59,246		63.49% Impervious Area

Tc (min)	Length (feet)	Slope (ft/ft)	Velocity (ft/sec)	Capacity (cfs)	Description
7.7	50	0.0200	0.11		**Sheet Flow, Sheet** Grass: Dense n= 0.240 P2= 3.60"
0.6	127	0.0500	3.60		**Shallow Concentrated Flow, Shallow1** Unpaved Kv= 16.1 fps
1.8	215	0.0100	2.03		**Shallow Concentrated Flow, Shallow2** Paved Kv= 20.3 fps
10.1	392	Total			

Summary for Subcatchment PR3: Buildings and Northerly O/S

Runoff = 1.92 cfs @ 12.18 hrs, Volume= 7,564 cf, Depth= 3.05"

Runoff by SCS TR-20 method, UH=SCS, Weighted-CN, Time Span= 0.00-40.00 hrs, dt= 0.05 hrs
Type III 24-hr 100 Year Rainfall=7.20"

Area (sf)	CN	Description
11,922	98	Unconnected roofs, HSG A
17,826	39	>75% Grass cover, Good, HSG A
29,748	63	Weighted Average
17,826		59.92% Pervious Area
11,922		40.08% Impervious Area
11,922		100.00% Unconnected

Tc (min)	Length (feet)	Slope (ft/ft)	Velocity (ft/sec)	Capacity (cfs)	Description
10.2	50	0.0100	0.08		**Sheet Flow, Sheet** Grass: Dense n= 0.240 P2= 3.60"
2.3	222	0.0100	1.61		**Shallow Concentrated Flow, Shallow** Unpaved Kv= 16.1 fps
12.5	272	Total			

Summary for Subcatchment PR4: Building and O/S Lot 1

Runoff = 1.01 cfs @ 12.16 hrs, Volume= 3,796 cf, Depth= 2.65"

Runoff by SCS TR-20 method, UH=SCS, Weighted-CN, Time Span= 0.00-40.00 hrs, dt= 0.05 hrs
Type III 24-hr 100 Year Rainfall=7.20"

Area (sf)	CN	Description
5,900	98	Roofs, HSG A
11,315	39	>75% Grass cover, Good, HSG A
17,215	59	Weighted Average
11,315		65.73% Pervious Area
5,900		34.27% Impervious Area

Tc (min)	Length (feet)	Slope (ft/ft)	Velocity (ft/sec)	Capacity (cfs)	Description
10.2	50	0.0100	0.08		**Sheet Flow, Sheet1** Grass: Dense n= 0.240 P2= 3.60"
0.2	17	0.0100	1.61		**Shallow Concentrated Flow, Shallow1** Unpaved Kv= 16.1 fps
10.4	67	Total			

Summary for Subcatchment PR5: Northerly Side of Project to Old South Rd

Runoff = 1.65 cfs @ 12.09 hrs, Volume= 5,343 cf, Depth= 5.22"

Runoff by SCS TR-20 method, UH=SCS, Weighted-CN, Time Span= 0.00-40.00 hrs, dt= 0.05 hrs
Type III 24-hr 100 Year Rainfall=7.20"

Area (sf)	CN	Description
9,106	98	Paved roads w/curbs & sewers, HSG A
3,185	39	>75% Grass cover, Good, HSG A
12,291	83	Weighted Average
3,185		25.91% Pervious Area
9,106		74.09% Impervious Area

Tc (min)	Length (feet)	Slope (ft/ft)	Velocity (ft/sec)	Capacity (cfs)	Description
6.0					**Direct Entry, Min. Tc = 0.1h**

Summary for Subcatchment PR6: Road A - East of project

Runoff = 2.92 cfs @ 12.10 hrs, Volume= 9,558 cf, Depth= 2.55"

Runoff by SCS TR-20 method, UH=SCS, Weighted-CN, Time Span= 0.00-40.00 hrs, dt= 0.05 hrs
Type III 24-hr 100 Year Rainfall=7.20"

Area (sf)	CN	Description
14,862	98	Paved roads w/curbs & sewers, HSG A
30,184	39	>75% Grass cover, Good, HSG A
45,046	58	Weighted Average
30,184		67.01% Pervious Area
14,862		32.99% Impervious Area

Tc (min)	Length (feet)	Slope (ft/ft)	Velocity (ft/sec)	Capacity (cfs)	Description
6.0					**Direct Entry, Min. Tc = 0.1h**

Summary for Pond POND1: Lot 3/4 Yard Drain

Inflow Area = 29,748 sf, 40.08% Impervious, Inflow Depth = 3.05" for 100 Year event
Inflow = 1.92 cfs @ 12.18 hrs, Volume= 7,564 cf
Outflow = 1.63 cfs @ 12.27 hrs, Volume= 7,564 cf, Atten= 15%, Lag= 5.3 min
Discarded = 0.14 cfs @ 12.27 hrs, Volume= 575 cf
Primary = 1.49 cfs @ 12.27 hrs, Volume= 6,989 cf

Routing by Dyn-Stor-Ind method, Time Span= 0.00-40.00 hrs, dt= 0.05 hrs
Peak Elev= 34.50' @ 12.27 hrs Surf.Area= 756 sf Storage= 293 cf

Plug-Flow detention time= 0.9 min calculated for 7,555 cf (100% of inflow)
Center-of-Mass det. time= 0.9 min (851.9 - 851.0)

Volume	Invert	Avail.Storage	Storage Description
#1	33.75'	1,004 cf	**Custom Stage Data (Prismatic)** Listed below (Recalc)

Elevation (feet)	Surf.Area (sq-ft)	Inc.Store (cubic-feet)	Cum.Store (cubic-feet)
33.75	4	0	0
34.00	275	35	35
34.50	750	256	291
35.00	2,100	713	1,004

Device	Routing	Invert	Outlet Devices
#1	Discarded	33.75'	**8.270 in/hr Exfiltration over Surface area**
#2	Primary	33.75'	**Nyoplast 10" Dome Grate Inlet** Head (feet) 0.00 0.10 0.20 1.00 Disch. (cfs) 0.000 0.280 0.800 1.800

Discarded OutFlow Max=0.14 cfs @ 12.27 hrs HW=34.49' (Free Discharge)
└**1=Exfiltration** (Exfiltration Controls 0.14 cfs)

Primary OutFlow Max=1.48 cfs @ 12.27 hrs HW=34.49' TW=27.41' (Dynamic Tailwater)
└**2=Nyoplast 10" Dome Grate Inlet** (Custom Controls 1.48 cfs)

Summary for Pond PSIS1: Proposed Subsurface Infiltration System 1

Inflow Area =	29,748 sf,	40.08% Impervious,	Inflow Depth =	2.82"	for 100 Year event
Inflow =	1.49 cfs @	12.27 hrs, Volume=	6,989 cf		
Outflow =	0.15 cfs @	11.80 hrs, Volume=	6,990 cf,	Atten= 90%,	Lag= 0.0 min
Discarded =	0.15 cfs @	11.80 hrs, Volume=	6,990 cf		

Routing by Dyn-Stor-Ind method, Time Span= 0.00-40.00 hrs, dt= 0.05 hrs
Peak Elev= 31.24' @ 14.38 hrs Surf.Area= 781 sf Storage= 3,077 cf

Plug-Flow detention time= (not calculated: outflow precedes inflow)
Center-of-Mass det. time= 204.2 min (1,055.4 - 851.2)

Volume	Invert	Avail.Storage	Storage Description
#1A	25.00'	1,355 cf	**10.33'W x 75.54'L x 6.75'H Field A** 5,269 cf Overall - 1,882 cf Embedded = 3,387 cf x 40.0% Voids
#2A	25.75'	1,882 cf	**StormTech MC-4500 +Cap** x 17 Inside #1 Effective Size= 90.4"W x 60.0"H => 26.46 sf x 4.03'L = 106.5 cf Overall Size= 100.0"W x 60.0"H x 4.33'L with 0.31' Overlap Cap Storage= +35.7 cf x 2 x 1 rows = 71.4 cf
		3,237 cf	Total Available Storage

Storage Group A created with Chamber Wizard

Device	Routing	Invert	Outlet Devices
#1	Discarded	25.00'	**8.270 in/hr Exfiltration over Horizontal area**

Discarded OutFlow Max=0.15 cfs @ 11.80 hrs HW=25.11' (Free Discharge)
└**1=Exfiltration** (Exfiltration Controls 0.15 cfs)

Summary for Pond PSIS2: Proposed Subsurface Infiltration System 2

Inflow Area =	93,320 sf,	63.49% Impervious,	Inflow Depth =	4.44"	for 100 Year event
Inflow =	9.57 cfs @	12.14 hrs, Volume=	34,496 cf		
Outflow =	7.54 cfs @	12.24 hrs, Volume=	34,509 cf,	Atten= 21%,	Lag= 6.1 min
Discarded =	0.39 cfs @	11.05 hrs, Volume=	22,242 cf		
Primary =	7.15 cfs @	12.24 hrs, Volume=	12,268 cf		

Routing by Dyn-Stor-Ind method, Time Span= 0.00-40.00 hrs, dt= 0.05 hrs
Peak Elev= 31.45' @ 12.25 hrs Surf.Area= 2,038 sf Storage= 8,450 cf

Plug-Flow detention time= (not calculated: outflow precedes inflow)
Center-of-Mass det. time= 125.2 min (945.3 - 820.0)

Volume	Invert	Avail.Storage	Storage Description
#1A	25.00'	3,373 cf	**28.50'W x 71.52'L x 6.75'H Field A** 13,758 cf Overall - 5,326 cf Embedded = 8,432 cf x 40.0% Voids
#2A	25.75'	5,326 cf	**StormTech MC-4500 +Cap** x 48 Inside #1 Effective Size= 90.4"W x 60.0"H => 26.46 sf x 4.03'L = 106.5 cf Overall Size= 100.0"W x 60.0"H x 4.33'L with 0.31' Overlap 3 Rows of 16 Chambers Cap Storage= +35.7 cf x 2 x 3 rows = 214.2 cf
		8,699 cf	Total Available Storage

Storage Group A created with Chamber Wizard

Device	Routing	Invert	Outlet Devices
#1	Discarded	25.00'	**8.270 in/hr Exfiltration over Horizontal area**
#2	Primary	30.00'	**18.0" Round Culvert** L= 30.0' CPP, square edge headwall, Ke= 0.500 Inlet / Outlet Invert= 30.00' / 29.50' S= 0.0167 '/' Cc= 0.900 n= 0.010, Flow Area= 1.77 sf

Discarded OutFlow Max=0.39 cfs @ 11.05 hrs HW=25.09' (Free Discharge)
└1=Exfiltration (Exfiltration Controls 0.39 cfs)

Primary OutFlow Max=7.09 cfs @ 12.24 hrs HW=31.43' TW=0.00' (Dynamic Tailwater)
└2=Culvert (Inlet Controls 7.09 cfs @ 4.08 fps)

Summary for Pond PSIS3: Proposed Subsurface Infiltration System 3

Inflow Area =	17,215 sf,	34.27% Impervious,	Inflow Depth = 2.65"	for 100 Year event
Inflow =	1.01 cfs @	12.16 hrs, Volume=	3,796 cf	
Outflow =	0.09 cfs @	11.80 hrs, Volume=	3,800 cf, Atten= 92%, Lag= 0.0 min	
Discarded =	0.09 cfs @	11.80 hrs, Volume=	3,800 cf	

Routing by Dyn-Stor-Ind method, Time Span= 0.00-40.00 hrs, dt= 0.05 hrs
Peak Elev= 30.55' @ 14.31 hrs Surf.Area= 448 sf Storage= 1,612 cf

Plug-Flow detention time= (not calculated: outflow precedes inflow)
Center-of-Mass det. time= 189.3 min (1,047.6 - 858.4)

Volume	Invert	Avail.Storage	Storage Description
#1A	25.00'	797 cf	**10.33'W x 43.34'L x 6.75'H Field A** 3,023 cf Overall - 1,030 cf Embedded = 1,993 cf x 40.0% Voids
#2A	25.75'	1,030 cf	**StormTech MC-4500 +Cap** x 9 Inside #1 Effective Size= 90.4"W x 60.0"H => 26.46 sf x 4.03'L = 106.5 cf Overall Size= 100.0"W x 60.0"H x 4.33'L with 0.31' Overlap Cap Storage= +35.7 cf x 2 x 1 rows = 71.4 cf
		1,827 cf	Total Available Storage

Storage Group A created with Chamber Wizard

Device	Routing	Invert	Outlet Devices
#1	Discarded	25.00'	**8.270 in/hr Exfiltration over Horizontal area**

Discarded OutFlow Max=0.09 cfs @ 11.80 hrs HW=25.09' (Free Discharge)
└1=Exfiltration (Exfiltration Controls 0.09 cfs)

Summary for Link 1L: Add to POC1

Inflow Area =	189,617 sf,	34.45% Impervious,	Inflow Depth =	1.37"	for 100 Year event
Inflow =	8.84 cfs @	12.24 hrs, Volume=	21,594 cf		
Primary =	8.84 cfs @	12.24 hrs, Volume=	21,594 cf,	Atten= 0%,	Lag= 0.0 min

Primary outflow = Inflow, Time Span= 0.00-40.00 hrs, dt= 0.05 hrs

Summary for Link ADD: (new Link)

Inflow Area =	57,337 sf,	41.80% Impervious,	Inflow Depth =	3.12"	for 100 Year event
Inflow =	4.57 cfs @	12.10 hrs, Volume=	14,901 cf		
Primary =	4.57 cfs @	12.10 hrs, Volume=	14,901 cf,	Atten= 0%,	Lag= 0.0 min

Primary outflow = Inflow, Time Span= 0.00-40.00 hrs, dt= 0.05 hrs

APPENDIX C:

Massachusetts DEP Storm Water Checklist

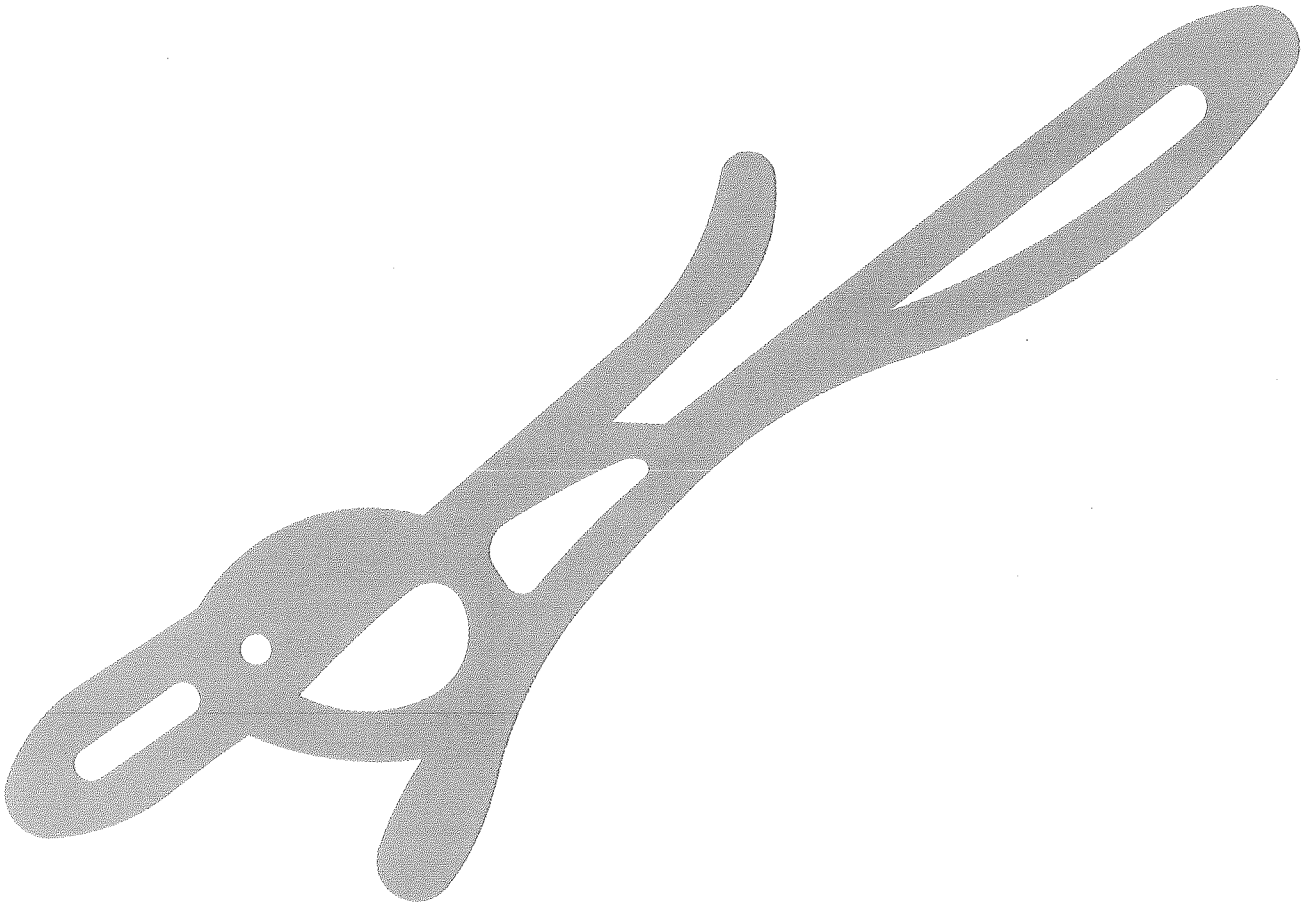

Massachusetts Department of Environmental Protection
Bureau of Resource Protection - Wetlands Program

Checklist for Stormwater Report

B. Stormwater Checklist and Certification

The following checklist is intended to serve as a guide for applicants as to the elements that ordinarily need to be addressed in a complete Stormwater Report. The checklist is also intended to provide conservation commissions and other reviewing authorities with a summary of the components necessary for a comprehensive Stormwater Report that addresses the ten Stormwater Standards.

Note: Because stormwater requirements vary from project to project, it is possible that a complete Stormwater Report may not include information on some of the subjects specified in the Checklist. If it is determined that a specific item does not apply to the project under review, please note that the item is not applicable (N.A.) and provide the reasons for that determination.

A complete checklist must include the Certification set forth below signed by the Registered Professional Engineer who prepared the Stormwater Report.

Registered Professional Engineer's Certification

I have reviewed the Stormwater Report, including the soil evaluation, computations, Long-term Pollution Prevention Plan, the Construction Period Erosion and Sedimentation Control Plan (if included), the Long-term Post-Construction Operation and Maintenance Plan, the Illicit Discharge Compliance Statement (if included) and the plans showing the stormwater management system, and have determined that they have been prepared in accordance with the requirements of the Stormwater Management Standards as further elaborated by the Massachusetts Stormwater Handbook. I have also determined that the information presented in the Stormwater Checklist is accurate and that the information presented in the Stormwater Report accurately reflects conditions at the site as of the date of this permit application.

Registered Professional Engineer Block and Signature

COMMONWEALTH OF MASSACHUSETTS
PETER J. OGREN
CIVIL
No. 27145
REGISTERED PROFESSIONAL ENGINEER

6/13/16

Signature and Date

Checklist

Project Type: Is the application for new development, redevelopment, or a mix of new and redevelopment?

☒ New development

☐ Redevelopment

☐ Mix of New Development and Redevelopment

Checklist for Stormwater Report

Checklist (continued)

LID Measures: Stormwater Standards require LID measures to be considered. Document what environmentally sensitive design and LID Techniques were considered during the planning and design of the project:

- ☒ No disturbance to any Wetland Resource Areas
- ☐ Site Design Practices (e.g. clustered development, reduced frontage setbacks)
- ☐ Reduced Impervious Area (Redevelopment Only)
- ☐ Minimizing disturbance to existing trees and shrubs
- ☐ LID Site Design Credit Requested:
  - ☐ Credit 1
  - ☐ Credit 2
  - ☐ Credit 3
- ☐ Use of "country drainage" versus curb and gutter conveyance and pipe
- ☐ Bioretention Cells (includes Rain Gardens)
- ☐ Constructed Stormwater Wetlands (includes Gravel Wetlands designs)
- ☐ Treebox Filter
- ☐ Water Quality Swale
- ☐ Grass Channel
- ☐ Green Roof
- ☐ Other (describe): _____

Standard 1: No New Untreated Discharges

- ☒ No new untreated discharges
- ☒ Outlets have been designed so there is no erosion or scour to wetlands and waters of the Commonwealth
- ☒ Supporting calculations specified in Volume 3 of the Massachusetts Stormwater Handbook included.

Checklist for Stormwater Report

Checklist (continued)

Standard 2: Peak Rate Attenuation

☐ Standard 2 waiver requested because the project is located in land subject to coastal storm flowage and stormwater discharge is to a wetland subject to coastal flooding.

☐ Evaluation provided to determine whether off-site flooding increases during the 100-year 24-hour storm.

☒ Calculations provided to show that post-development peak discharge rates do not exceed pre-development rates for the 2-year and 10-year 24-hour storms. If evaluation shows that off-site flooding increases during the 100-year 24-hour storm, calculations are also provided to show that post-development peak discharge rates do not exceed pre-development rates for the 100-year 24-hour storm.

Standard 3: Recharge

☒ Soil Analysis provided.

☒ Required Recharge Volume calculation provided.

☐ Required Recharge volume reduced through use of the LID site Design Credits.

☒ Sizing the infiltration, BMPs is based on the following method: Check the method used.

☐ Static ☒ Simple Dynamic ☐ Dynamic Field[1]

☒ Runoff from all impervious areas at the site discharging to the infiltration BMP.

☐ Runoff from all impervious areas at the site is *not* discharging to the infiltration BMP and calculations are provided showing that the drainage area contributing runoff to the infiltration BMPs is sufficient to generate the required recharge volume.

☒ Recharge BMPs have been sized to infiltrate the Required Recharge Volume.

☐ Recharge BMPs have been sized to infiltrate the Required Recharge Volume *only* to the maximum extent practicable for the following reason:

- ☐ Site is comprised solely of C and D soils and/or bedrock at the land surface
- ☐ M.G.L. c. 21E sites pursuant to 310 CMR 40.0000
- ☐ Solid Waste Landfill pursuant to 310 CMR 19.000
- ☐ Project is otherwise subject to Stormwater Management Standards only to the maximum extent practicable.

☒ Calculations showing that the infiltration BMPs will drain in 72 hours are provided.

☐ Property includes a M.G.L. c. 21E site or a solid waste landfill and a mounding analysis is included.

[1] 80% TSS removal is required prior to discharge to infiltration BMP if Dynamic Field method is used.

Checklist for Stormwater Report

Checklist (continued)

Standard 3: Recharge (continued)

☒ The infiltration BMP is used to attenuate peak flows during storms greater than or equal to the 10-year 24-hour storm and separation to seasonal high groundwater is less than 4 feet and a mounding analysis is provided.

☒ Documentation is provided showing that infiltration BMPs do not adversely impact nearby wetland resource areas.

Standard 4: Water Quality

The Long-Term Pollution Prevention Plan typically includes the following:

- Good housekeeping practices;
- Provisions for storing materials and waste products inside or under cover;
- Vehicle washing controls;
- Requirements for routine inspections and maintenance of stormwater BMPs;
- Spill prevention and response plans;
- Provisions for maintenance of lawns, gardens, and other landscaped areas;
- Requirements for storage and use of fertilizers, herbicides, and pesticides;
- Pet waste management provisions;
- Provisions for operation and management of septic systems;
- Provisions for solid waste management;
- Snow disposal and plowing plans relative to Wetland Resource Areas;
- Winter Road Salt and/or Sand Use and Storage restrictions;
- Street sweeping schedules;
- Provisions for prevention of illicit discharges to the stormwater management system;
- Documentation that Stormwater BMPs are designed to provide for shutdown and containment in the event of a spill or discharges to or near critical areas or from LUHPPL;
- Training for staff or personnel involved with implementing Long-Term Pollution Prevention Plan;
- List of Emergency contacts for implementing Long-Term Pollution Prevention Plan.

☒ A Long-Term Pollution Prevention Plan is attached to Stormwater Report and is included as an attachment to the Wetlands Notice of Intent.

☒ Treatment BMPs subject to the 44% TSS removal pretreatment requirement and the one inch rule for calculating the water quality volume are included, and discharge:

- ☒ is within the Zone II or Interim Wellhead Protection Area
- ☐ is near or to other critical areas
- ☒ is within soils with a rapid infiltration rate (greater than 2.4 inches per hour)
- ☐ involves runoff from land uses with higher potential pollutant loads.

☐ The Required Water Quality Volume is reduced through use of the LID site Design Credits.

☒ Calculations documenting that the treatment train meets the 80% TSS removal requirement and, if applicable, the 44% TSS removal pretreatment requirement, are provided.

Checklist for Stormwater Report

Checklist (continued)

Standard 4: Water Quality (continued)

☒ The BMP is sized (and calculations provided) based on:

- ☐ The ½" or 1" Water Quality Volume or
- ☒ The equivalent flow rate associated with the Water Quality Volume and documentation is provided showing that the BMP treats the required water quality volume.

☒ The applicant proposes to use proprietary BMPs, and documentation supporting use of proprietary BMP and proposed TSS removal rate is provided. This documentation may be in the form of the propriety BMP checklist found in Volume 2, Chapter 4 of the Massachusetts Stormwater Handbook and submitting copies of the TARP Report, STEP Report, and/or other third party studies verifying performance of the proprietary BMPs.

☐ A TMDL exists that indicates a need to reduce pollutants other than TSS and documentation showing that the BMPs selected are consistent with the TMDL is provided.

Standard 5: Land Uses With Higher Potential Pollutant Loads (LUHPPLs)

☐ The NPDES Multi-Sector General Permit covers the land use and the Stormwater Pollution Prevention Plan (SWPPP) has been included with the Stormwater Report.

☒ The NPDES Multi-Sector General Permit covers the land use and the SWPPP will be submitted ***prior to*** the discharge of stormwater to the post-construction stormwater BMPs.

☐ The NPDES Multi-Sector General Permit does ***not*** cover the land use.

☐ LUHPPLs are located at the site and industry specific source control and pollution prevention measures have been proposed to reduce or eliminate the exposure of LUHPPLs to rain, snow, snow melt and runoff, and been included in the long term Pollution Prevention Plan.

☐ All exposure has been eliminated.

☐ All exposure has ***not*** been eliminated and all BMPs selected are on MassDEP LUHPPL list.

☐ The LUHPPL has the potential to generate runoff with moderate to higher concentrations of oil and grease (e.g. all parking lots with >1000 vehicle trips per day) and the treatment train includes an oil grit separator, a filtering bioretention area, a sand filter or equivalent.

Standard 6: Critical Areas

☐ The discharge is near or to a critical area and the treatment train includes only BMPs that MassDEP has approved for stormwater discharges to or near that particular class of critical area.

☐ Critical areas and BMPs are identified in the Stormwater Report.

Checklist for Stormwater Report

Checklist (continued)

Standard 7: Redevelopments and Other Projects Subject to the Standards only to the maximum extent practicable

☐ The project is subject to the Stormwater Management Standards only to the maximum Extent Practicable as a:

- ☐ Limited Project
- ☐ Small Residential Projects: 5-9 single family houses or 5-9 units in a multi-family development provided there is no discharge that may potentially affect a critical area.
- ☐ Small Residential Projects: 2-4 single family houses or 2-4 units in a multi-family development with a discharge to a critical area
- ☐ Marina and/or boatyard provided the hull painting, service and maintenance areas are protected from exposure to rain, snow, snow melt and runoff
- ☐ Bike Path and/or Foot Path
- ☐ Redevelopment Project
- ☐ Redevelopment portion of mix of new and redevelopment.

☐ Certain standards are not fully met (Standard No. 1, 8, 9, and 10 must always be fully met) and an explanation of why these standards are not met is contained in the Stormwater Report.

☐ The project involves redevelopment and a description of all measures that have been taken to improve existing conditions is provided in the Stormwater Report. The redevelopment checklist found in Volume 2 Chapter 3 of the Massachusetts Stormwater Handbook may be used to document that the proposed stormwater management system (a) complies with Standards 2, 3 and the pretreatment and structural BMP requirements of Standards 4-6 to the maximum extent practicable and (b) improves existing conditions.

Standard 8: Construction Period Pollution Prevention and Erosion and Sedimentation Control

A Construction Period Pollution Prevention and Erosion and Sedimentation Control Plan must include the following information:

- Narrative;
- Construction Period Operation and Maintenance Plan;
- Names of Persons or Entity Responsible for Plan Compliance;
- Construction Period Pollution Prevention Measures;
- Erosion and Sedimentation Control Plan Drawings;
- Detail drawings and specifications for erosion control BMPs, including sizing calculations;
- Vegetation Planning;
- Site Development Plan;
- Construction Sequencing Plan;
- Sequencing of Erosion and Sedimentation Controls;
- Operation and Maintenance of Erosion and Sedimentation Controls;
- Inspection Schedule;
- Maintenance Schedule;
- Inspection and Maintenance Log Form.

☒ A Construction Period Pollution Prevention and Erosion and Sedimentation Control Plan containing the information set forth above has been included in the Stormwater Report.

Checklist for Stormwater Report

Checklist (continued)

Standard 8: Construction Period Pollution Prevention and Erosion and Sedimentation Control (continued)

☐ The project is highly complex and information is included in the Stormwater Report that explains why it is not possible to submit the Construction Period Pollution Prevention and Erosion and Sedimentation Control Plan with the application. A Construction Period Pollution Prevention and Erosion and Sedimentation Control has ***not*** been included in the Stormwater Report but will be submitted ***before*** land disturbance begins.

☐ The project is ***not*** covered by a NPDES Construction General Permit.

☐ The project is covered by a NPDES Construction General Permit and a copy of the SWPPP is in the Stormwater Report.

☐ The project is covered by a NPDES Construction General Permit but no SWPPP been submitted. The SWPPP will be submitted BEFORE land disturbance begins.

Standard 9: Operation and Maintenance Plan

☒ The Post Construction Operation and Maintenance Plan is included in the Stormwater Report and includes the following information:

- ☒ Name of the stormwater management system owners;
- ☒ Party responsible for operation and maintenance;
- ☒ Schedule for implementation of routine and non-routine maintenance tasks;
- ☒ Plan showing the location of all stormwater BMPs maintenance access areas;
- ☒ Description and delineation of public safety features;
- ☒ Estimated operation and maintenance budget; and
- ☒ Operation and Maintenance Log Form.

☐ The responsible party is ***not*** the owner of the parcel where the BMP is located and the Stormwater Report includes the following submissions:

- ☐ A copy of the legal instrument (deed, homeowner's association, utility trust or other legal entity) that establishes the terms of and legal responsibility for the operation and maintenance of the project site stormwater BMPs;
- ☐ A plan and easement deed that allows site access for the legal entity to operate and maintain BMP functions.

Standard 10: Prohibition of Illicit Discharges

☒ The Long-Term Pollution Prevention Plan includes measures to prevent illicit discharges;

☒ An Illicit Discharge Compliance Statement is attached;

☒ NO Illicit Discharge Compliance Statement is attached but will be submitted ***prior to*** the discharge of any stormwater to post-construction BMPs.

APPENDIX D:

Water Quality Calculations

To POC 1:

Water Quality Volume Calculation:

$$V_{wq} = d_{wq} \times A_{imp}$$

Where,

V_{wq} = Water Quality Volume

d_{wq} = Water Quality Depth (1.0-inch for Critical Areas, ½-inch for Non-Critical Areas)

A_{imp} = Impervious Area Directed to BMP (Sub-catchment PR2)

$$V_{wq} = (1.0") \left(\frac{1\ foot}{12\ inches}\right)(59{,}246\ sf)$$

$$V_{wq} = 4{,}937\ cf$$

PSIS2 Storage Volume = 8,576 cf

Proprietary Structure Sizing Calculation per MassDEP "Standard Method to Covert Required Water Quality Volume to a Discharge Rate (October 15, 2013):

Impervious Area to VortSentry = 59,246 sf (0.00213 sq. mi.).

Time of Concentration for Watershed PR1 = 10.1 minutes (0.17 hours)

Unit Peak Discharge (q_u) from DEP Figure 3: 700 csm/in

$$Q_{1.0"} = (q_u)(A_{imp})(d_{wq})$$

Where,

$Q_{1.0"}$ = Peak Flow Rate associated with the first 1.0-inches of runoff

q_u = Unit Peak Discharge, in Cubic Feet per Second per Square Mile per Inch (csm/in.)

A_{imp} = Impervious Area in Drainage Area in Square Miles

d_{wq} = Water Quality Depth in Inches

$$Q_{1.0"} = \left(700\frac{csm}{in}\right)(0.00213\ sq.mi.)(1.0\ in)$$

$$Q_{1.0"} = 1.49\ cfs$$

Maximum Design Flow Rate for VortSentry HS60 = 2.2 cfs

INSTRUCTIONS:
1. In BMP Column, click on Blue Cell to Activate Drop Down Menu
2. Select BMP from Drop Down Menu
3. After BMP is selected, TSS Removal and other Columns are automatically completed.

Version 1, Automated: Mar. 4, 2008

Location: Old South Road Crossing

TSS Removal Calculation Worksheet

B BMP[1]	C TSS Removal Rate[1]	D Starting TSS Load*	E Amount Removed (C*D)	F Remaining Load (D-E)
Deep Sump and Hooded Catch Basin	0.25	1.00	0.25	0.75
Proprietary Treatment Practice	0.75	0.75	0.56	0.19
Infiltration Basin	0.80	0.19	0.15	0.04
	0.00	0.04	0.00	0.04
	0.00	0.04	0.00	0.04

Total TSS Removal = 96%

Separate Form Needs to be Completed for Each Outlet or BMP Train

Project: NAN-0107J
Prepared By: AMC
Date: 6/10/2016

*Equals remaining load from previous BMP (E) which enters the BMP

Non-automated TSS Calculation Sheet must be used if Proprietary BMP Proposed
1. From MassDEP Stormwater Handbook Vol. 1

NAN·0107J

CONTECH®
ENGINEERED SOLUTIONS

Hydrodynamic Separation Products Overview

Massachusetts

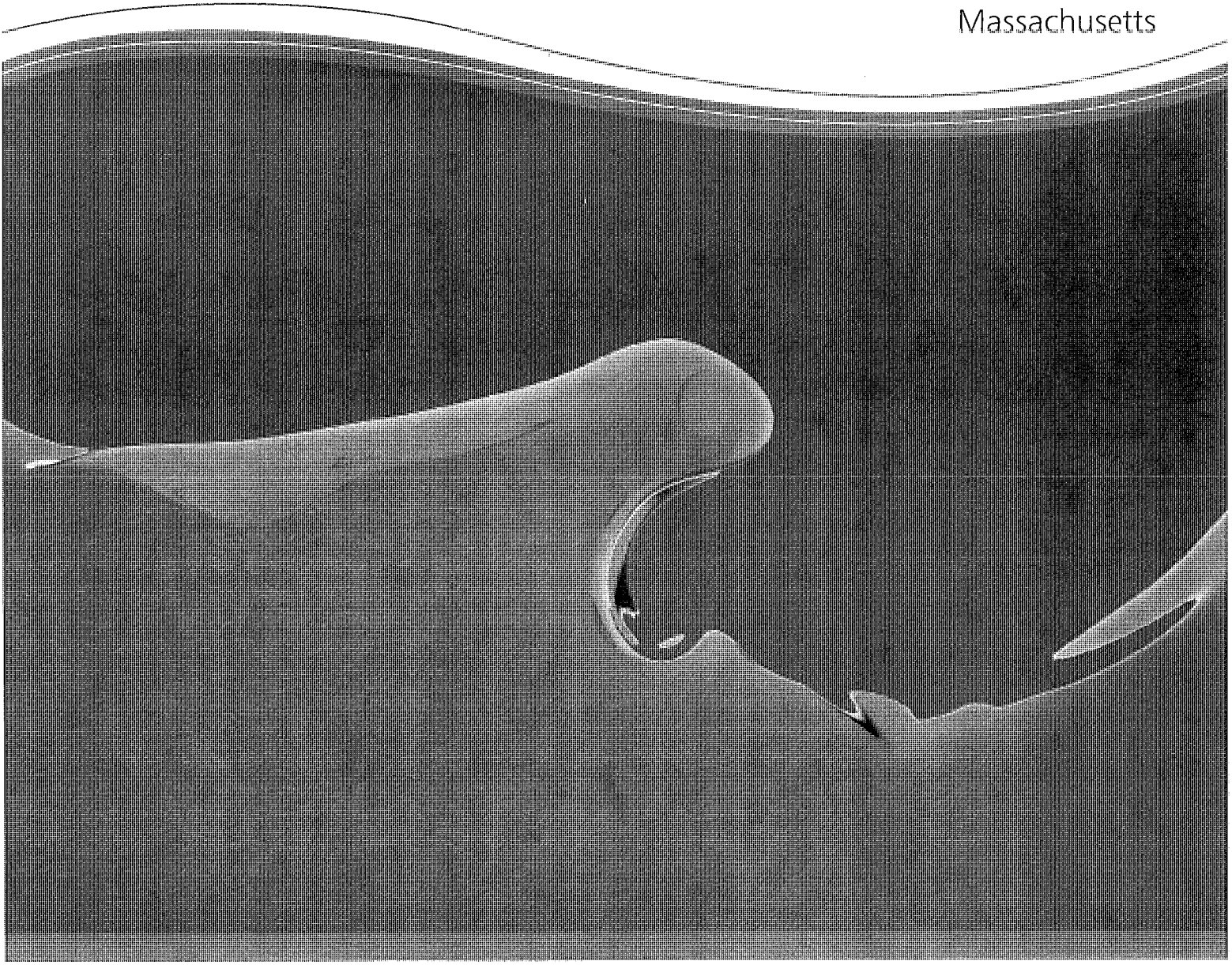

GDS

Vortechs®

VortSentry® HS

Available Models

Vortechs Model	Swirl Chamber Diameter		Internal Length		Peak Treatment Flow[1]		Sediment Storage[2]	
	ft	m	ft	m	cfs	L/s	yd3	m3
1000	3	0.9	9	2.7	1.6	45.3	0.7	0.5
2000	4	1.2	10	3	2.8	79.3	1.2	0.9
3000	5	1.5	11	3.4	4.5	127.4	1.8	1.4
4000	6	1.8	12	3.7	6	169.9	2.4	1.8
5000	7	2.1	13	4	8.5	240.7	3.2	2.4
7000	8	2.4	14	4.3	11	311.5	4	3.1
9000	9	2.7	15	4.6	14	396.4	4.8	3.7
11000	10	3	16	4.9	17.5	495.5	5.6	4.3
16000	12	3.7	18	5.5	25	707.9	7.1	5.4

1. Peak Treatment Flow is maximum flow treated for each unit listed. This flow represents an infrequent storm event such as a 10 or 25 yr storm.
   Standard Vortechs System depth below invert is 3' for all precast models.
   Cast-in-place system are available to treat higher flows. Check with your local representatives for specifications.
2. Maintenance recommended when sediment depth has accumulated to within 12-18 inches of the dry weather water surface elevation.

VortSentry HS Model	Swirl Chamber Diameter (ft)	Typical Depth Below Invert (ft)	Treatment Capacity (cfs)[1]	Max. Inlet/Outlet Pipe Diameter (in)	Maximum Sediment Storage Capacity (CF)
VortSentry HS36*	3	5.6	0.55	18	39
w/ 1' added sump	3	6.6	0.55	18	47
w/ 2' added sump	3	7.6	0.55	18	54
w/ 3' added sump	3	8.6	0.55	18	61
w/ 4' added sump	3	9.6	0.55	18	68
w/ 5' added sump	3	10.6	0.55	18	75
VortSentry HS48**	4	6.8	1.2	24	85
w/ 1' added sump	4	7.8	1.2	24	97
w/ 2' added sump	4	8.8	1.2	24	110
w/ 3' added sump	4	9.8	1.2	24	123
w/ 4' added sump	4	10.8	1.2	24	135
VortSentry HS60***	5	8.0	2.2	30	156
w/ 1' added sump	5	9.0	2.2	30	176
w/ 2' added sump	5	10.0	2.2	30	196
w/ 3' added sump	5	11.0	2.2	30	215

*maintenance recommended when sediment reaches a height of 3'-7" below water surface elevation in sump.
**maintenance recommended when sediment reaches a height of 4'-9" below water surface elevation in sump.
***maintenance recommended when sediment reaches a height of 6.0' below water surface elevation in sump.

1. Design Flow Rate is based on 80% removal of particle size distribution with an average particle size of 240 micron. This flow also represents the maximum flow prior to which bypass occurs.

Notes: Systems can be sized based on a water quality flow (e.g. 1 inch storm) or on a net annual basis depending on the local regulatory requirement.
When sizing based on a water quality storm, the required flow to be treated should be equal or less than the listed water quality flow for the selected system. Systems sized based on a water quality storm are generally more conservatively sized.
Additional particle size distributions are available for sizing purposes upon request.
Depth below invert is measured to the inside bottom of the system. This depth can be adjusted to meet specific storage or maintenance requirements.
Contact our support staff for the most cost effective sizing for your area.

APPENDIX E:

Construction Period Pollution Prevention and Erosion and Sedimentation Control Plan

Construction Period Pollution Prevention Plan
Old South Road Crossing – Nantucket, MA
June 10, 2016

Project Name: Old South Road Crossing
Retail Liner Buildings
Nantucket, MA

Owner's Name: Richmond Great Point Development, LLC
23 Concord Street
Wilmington, MA

Applicant's Name: Same as above

Party Responsible for Maintenance: To be determined

Project Description:

Richmond Great Point Development, LLC (the "Applicant") propose to construct a multi-unit retail development to be known as "Old South Road Crossing" (the "Project") proximate to the intersection of Old South Road and Lovers Lane.

Erosion and Sedimentation Control Measures During Construction Activities:

Siltation Fence and Hay Bales

Silt fence with hay bales are to be installed as shown on Sheet 8 of 8 (Erosion Control Plan) of the Definitive Plan Set. Silt fence and hay bales are to be installed prior to the commencement of work on the site and in accordance with the design plans. An additional supply of silt fence and hay bales shall be maintained on-site for repair and/or replacement of any disturbed silt fence or hay bales. The silt fence and hay bale line(s) shall be inspected and maintained on a weekly basis. Deposited sediment shall be removed when the level of deposition reaches approximately one-third (1/3) the height of the fence.

Storm Drain Inlet Protection

A temporary storm inlet protection filter will be placed in all catch basin units. The purpose of the filter is to prevent the inflow of sediment into the closed drainage system(s). The filters shall remain in place until a permanent vegetative cover is established and the transport of sediment is no longer visibly apparent. The filter shall be inspected and maintained on a weekly basis and after significant storm events. Significant storm events are those having greater than one-quarter (1/4) inch of precipitation in a 24-hour period.

Surface Stabilization

The surface of all disturbed areas shall be stabilized during and after construction. Temporary measures shall be taken during construction to prevent erosion and sedimentation. No construction sediment shall be allowed to enter infiltration areas. All disturbed slopes shall be stabilized with a permanent vegetative cover. Some or all of the following measures can be used on the Project as conditions may warrant:

- Temporary Seeding
- Temporary Mulching
- Placement of Hay
- Placement of Geo-Synthetic Fabrics
- Hydroseeding
- Permanent Seeding
- Placement of Sod

Surface and Subsurface Infiltration Facilities

No construction period runoff should be directed toward infiltration facilities. The performance of these facilities shall be checked weekly and after significant storm events throughout construction.

INSPECTION SCHEDULE and EVALUATION CHECKLIST

To be completed weekly and within 24-hours of significant rainfall events (greater than 1/4-inches in a 24-hour period).

Inspector's Name: _____ Date: _____

Qualifications: _____

_____

Days since last rainfall: _____ days Amount of last rainfall: _____inches

Stabilization Measures

Sub-Catchment	Date of Last Disturbance	Date of Next Disturbance	Stabilized (Yes or No)	Stabilized With:	Condition
PR1					
PR2					
PR3					
PR4					
PR5					
PR6					

Stabilization required: _____

_____

_____

_____

_____

_____

_____

To be performed by: _____ on or before: _____

PERIMETER CONTROLS

Date of Inspection: _____

Silt Fence and Hay Bales:

To Study Area:	Has sediment reached 1/3 height of silt fence? (Yes or No)	Depth of Silt (inches)	Is fence secure? (Yes or No)	Is there evidence of bypass or overtopping? (Yes or No)	Describe location of Problem(s), if any.
POC1					

Maintenance required for silt fence and hay bales: _____

_____

_____

To be performed by: _____ on or before: _____

Stabilized Construction Entrance:

Location	Does much sediment get tracked onto roadway? (Yes or No)	Is gravel clean or full of sediment?	Is all traffic using the entrance to access/exit the site? (Yes or No)	Is the culvert beneath the entrance working? (Yes or No)
Old South Road				

Maintenance required for stabilized construction entrance: _____

_____

_____

To be performed by: _____ on or before: _____

Other Best Management Practices:

BMP	In use? (Yes or No)	Maintenance Required? (Yes or No)	Describe location of Problem(s), if any.
Sweeping of Adjacent Roads			
Catch Basin Inlet Protection			
VortSentry			
PSIS1			
PSIS2			
PSIS3			

Maintenance required: _____

_____

_____

_____

_____

To be performed by: _____ on or before: _____

I certify under penalty of law that this document and all attachments were prepared under my direction or supervision in accordance with a system designed to assure that qualified personnel properly gathered and evaluated the information submitted. Based on my inquiry of the person or persons who manage the system, or those persons directly responsible for gathering the information, the information submitted is, to the best of my knowledge and belief, true, accurate, and complete. I am aware that there are significant penalties for submitting false information, including the possibility of fines and imprisonment for knowing violations.

Signature: _____ Date: _____

APPENDIX F:

Long Term Operation and Maintenance Plan

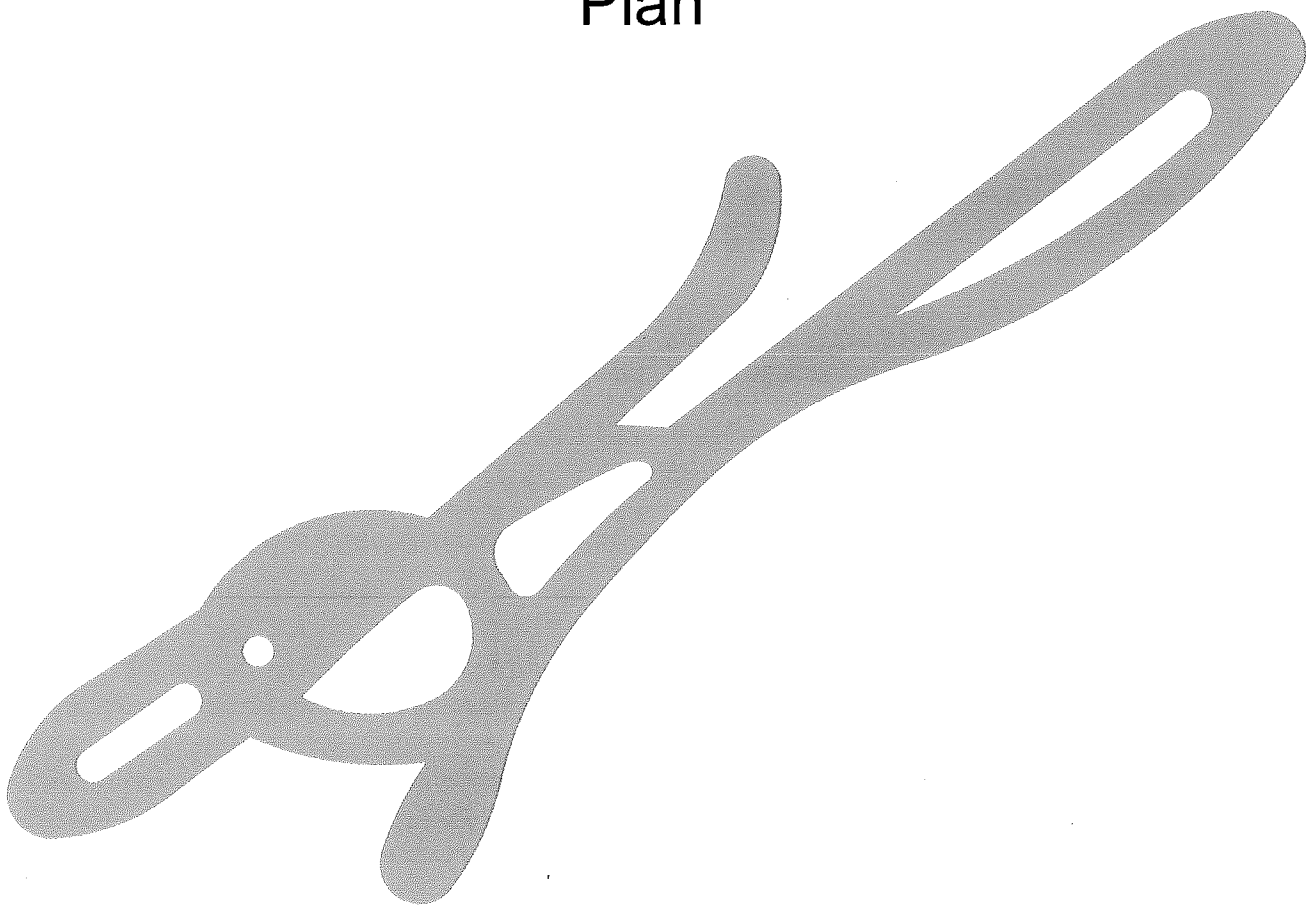

Long Term Operations and Maintenance Plan
Old South Road Crossing – Nantucket, MA
June 10, 2016

Project Name: Old South Road Crossing
Retail Liner Buildings
Nantucket, MA

Owner's Name: Richmond Great Point Development, LLC and
23 Concord Street
Wilmington, MA

Applicant's Name: Same as above

Party Responsible for Maintenance: To be determined

Project Description:

Richmond Great Point Development, LLC (the "Applicant") propose to construct a multi-unit retail development to be known as "Old South Road Crossing" (the "Project") proximate to the intersection of Old South Road and Lovers Lane.

Post-Construction Inspection and Maintenance Measures:

Erosion Control

Sedimentation caused from erosion of soils can adversely affect the performance of the storm water management system. Areas that are barren and/or showing signs of erosion should be stabilized through immediate re-vegetation.

Debris and Litter Removal

Litter and other debris may collect in storm water best management practices (BMPs), potentially causing clogging of facilities. All debris and litter shall be removed as necessary, at a minimum of four (4) times per year in the spring, summer, fall and winter.

Deep Sump and Hooded Catch Basins

In accordance with Volume 2, Chapter 2 of the MaDEP Storm Water Handbook as summarized below:

Inspect or clean deep sump catch basins at least four (4) times per year and at the end of the foliage and snow-removal seasons. Sediments must also be removed four (4) times per year or whenever the depth of deposits is greater than or equal to one-half (1/2) the depth from the invert of the lowest pipe in the basin to the bottom of the basin (the sump). If handling runoff from land uses with higher potential pollutant loads (LUHPPLs) or discharging near or to a critical area, more frequent cleaning may be necessary.

Deep sump and hooded catch basins should be cleaned with vacuum trucks only. Clamshell buckets shall not be used to clean hooded catch basins. Vacuum trucks remove more sediment and supernatant, and is less likely to snap the hood within the deep sump basin.

Always consider the safety of the staff cleaning deep sump catch basins. Cleaning a deep sump catch basin within a road with active traffic or even within a parking lot is dangerous, and a police detail may be necessary to safeguard workers.

Although catch basin debris often contains concentrations of oil and hazardous materials such as petroleum hydrocarbons and metals, MassDEP classifies them as solid waste. Unless there is evidence that they have been contaminated by a spill or other means, MassDEP does not routinely require catch basin cleanings to be tested before disposal. Contaminated catch basin cleanings must be evaluated in accordance with the Hazardous Waste Regulations, 310 CMR 30.000, and handled as hazardous waste.

In the absence of evidence of contamination, catch basin cleanings may be taken to a landfill or other facility permitted by MassDEP to accept solid waste, without any prior approval by MassDEP. However, some landfills require catch basin cleanings to be tested before they are accepted.

With prior MassDEP approval, catch basin cleanings may be used as grading and shaping materials at landfills undergoing closure (see Revised Guidelines for Determining Closure Activities at Inactive Unlined Landfill Sites) or as daily cover at active landfills. MassDEP also encourages the beneficial reuse of catch basin cleanings whenever possible. A Beneficial Reuse Determination is required for such use.

MassDEP regulations prohibit landfills from accepting materials that contain free-draining liquids. One way to remove liquids is to use a hydraulic lift truck during cleaning operations so that the material can be decanted at the site. After loading material from several catch basins into a truck, elevate the truck so that any free-draining liquid can flow back into the structure. If there is no free water in the truck, the material may be deemed to be sufficiently dry. Otherwise the catch basin cleanings must undergo a Paint Filter Liquids Test. Go to www. Mass.gov/dep/ recycle/laws/cafacts.doc for information on all of the MassDEP requirements pertaining to the disposal of catch basin cleanings.

VortSentry HS – Swirl Particle Seperator

In accordance with Manufacturer's recommendations, accompanying this report.

Sub-Surface Infiltration Basin

In accordance with Volume 2, Chapter 2 of the MaDEP Storm Water Handbook and Manufacturer's recommendations as summarized below:

Inspect inlets at least twice per year.

Good Housekeeping Practices:

Provisions for storing paints, cleaners, automotive waste and other potentially hazardous household waste products inside or under cover:

- All materials stored on-site shall be in a neat, orderly manner in their appropriate containers with original manufacturer's label(s);
- Only store enough material as needed; whenever possible, all of a product shall be used prior to disposing of container;
- Manufacturer, federal, state and local recommendations for proper use and disposal shall be followed.

Vehicle Washing Controls:

- Use commercial car washes whenever possible. Car washes treat and/or recycle wash water;
- Cars shall be washed on gravel, grass or other permeable surfaces to allow filtration to occur;
- Use biodegradable soaps only;
- Use hose nozzles that automatically turn off when unattended.

Routine Inspection and Maintenance of Storm Water BMPs

- Previously addressed.

Spill Prevention and Response Plans

- Spill control practices shall be in conformance with the guidelines set forth in the National Pollutant Discharge Elimination System (NPDES) Storm Water Pollution Prevention Plan (SWPPP).

Maintenance of Lawns, Gardens and Other Landscaped Areas:

- Grass shall not be cut shorter than two (2) to three (3) inches and mulch clipping should be left on lawns as a natural fertilizer;
- Use low volume water approaches for irrigation such as drip-type or sprinkler systems. Water plants only when needed to enhance root growth and avoid runoff problems;
- Mulch shall be used wherever practicable. Mulch helps retain water and prevents erosion.

Storage and Use of Fertilizers, Herbicides and Pesticides:

- Fertilizers shall be applied in the minimum amounts recommended by the manufacturer. Once applied, fertilizer shall be worked into the soil to limit exposure to storm water. Storage will be in covered areas only. Contents of partially used bags shall be transferred into sealable plastic containers to avoid spills;
- Do not fertilize before or during rain events;
- Consider the use of organic fertilizers;
- Pesticides shall be applied only when necessary and only in the minimum amounts recommended by the manufacturer.

Pet Waste Management

- Scoop up and seal pet waste in plastic bags. Dispose of in garbage.

Solid Waste Management

- All solid waste shall be disposed of or recycled in accordance with all federal, state and local regulations.

List of Emergency Contacts for Plan Implementation

To be determined by Owner.

POST-CONSTRUCTION
OPERATION AND MAINTENANCE LOG

Inspector's Name: _____ Date: _____

Qualifications: _____

_____

Inspection Type: ☐ Routine ☐ Spill ☐ Other: _____

☐ Post-Rainfall (Precipitation in Inches: _____)

BMP	Frequency	Date Last Performed	Comments
Litter and Debris Removal	After Significant Rain Events		
Deep Sump and Hooded Catch Basins	Inspect four (4) times per year		
	Maintenance as necessary		
Sub-Surface Infiltration System	Inspect two (2) times per year		
Vegetated Areas	Inspect as necessary for erosion		

CONTECH®
ENGINEERED SOLUTIONS

VortSentry® HS Guide
Operation, Design, Performance and Maintenance

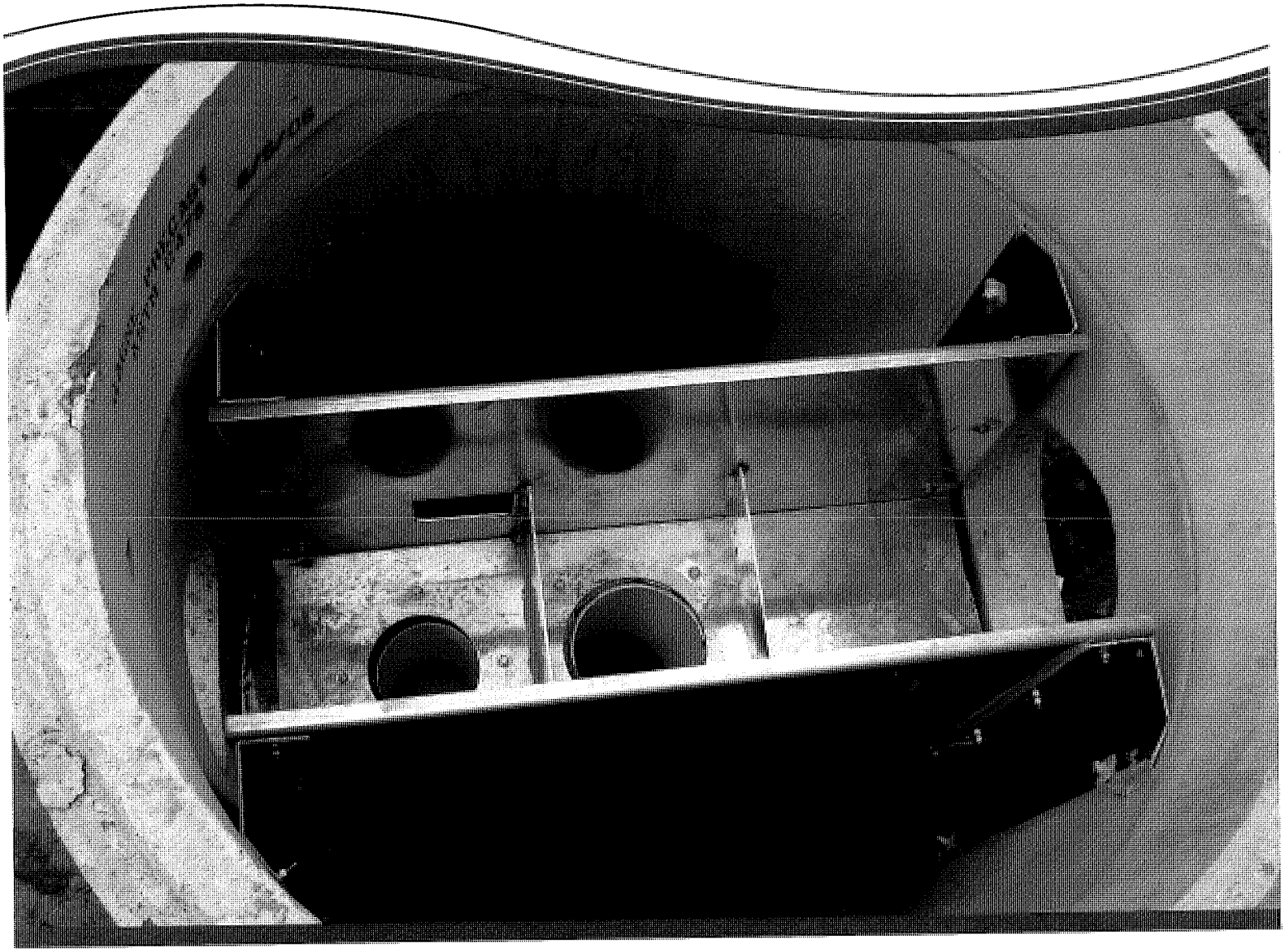

VortSentry® HS

The VortSentry HS is a compact, below grade stormwater treatment system that employs helical flow technology to enhance gravitational separation of floating and settling pollutants from stormwater flows. With the ability to accept a wide range of pipe sizes, the VortSentry HS can treat and convey flows from small to large sites. A unique internal bypass design means higher flows can be diverted without the use of external bypass structures. The VortSentry HS is also available in a grate inlet configuration, which is ideal for retrofit installations.

Operation Overview

Low, frequently occurring storm flows are directed into the treatment chamber through the primary inlet. The tangentially oriented downward pipe induces a swirling motion in the treatment chamber that increases capture and containment abilities. Moderate storm flows are directed into the treatment chamber through the secondary inlet, which allows for capture of floating trash and debris. The secondary inlet also provides for treatment of higher flows without significantly increasing the velocity or turbulence in the treatment chamber. This allows for a more quiescent separation environment. Settleable solids and floating pollutants are captured and contained in the treatment chamber.

Flow exits the treatment chamber through the outlet flow control, which manages the amount of flow that is treated and helps maintain the helical flow patterns developed within the treatment chamber.

Flows exceeding the system's rated treatment flow are diverted away from the treatment chamber by the flow partition. Internal diversion of high flows eliminates the need for external bypass structures. During bypass, the head equalizing baffle applies head on the outlet flow control to limit the flow through the treatment chamber. This helps prevent re-suspension of previously captured pollutants.

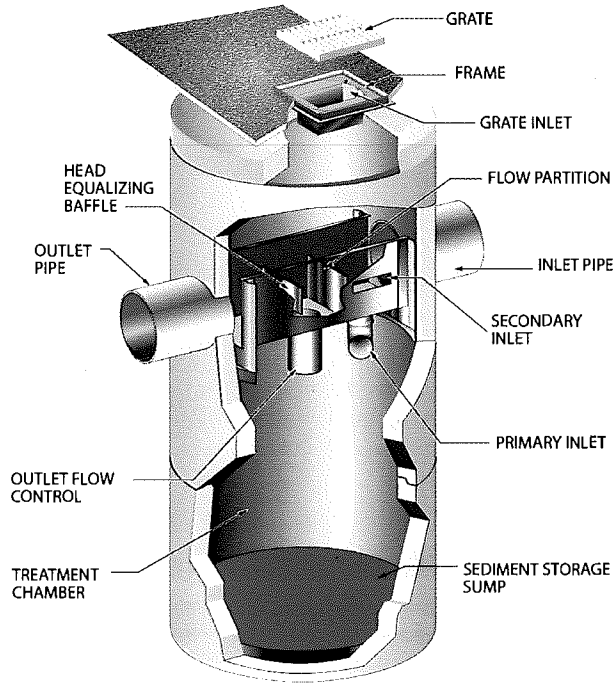

Design Basics

There are two primary methods of sizing a VortSentry HS system. The Water Quality Flow Rate Method determines which model size provides the desired removal efficiency at a given flow for a defined particle size. The summation process of the Rational Rainfall Method is used when a specific removal efficiency of the net annual sediment load is required.

Typically, VortSentry HS systems are designed to achieve an 80% annual solids load reduction based on lab generated performance curves for a particle gradation with an average particle size (d_{50}) of 240-microns (μm).

Water Quality Flow Rate Method

In many cases, regulations require that a specific flow rate, often referred to as the water quality design flow (WQQ), be treated. This WQQ represents the peak flow rate from either an event with a specific recurrence interval (i.e. the six-month storm) or a water quality depth (i.e. 1/2-inch of rainfall).

The VortSentry HS is designed to treat all flows up to the WQQ. Due to its internal bypass weir configuration, flow rates in the treatment chamber only increase minimally once the WQQ is surpassed. At influent rates higher than the WQQ, the flow partition will allow most flow exceeding the treatment flow rate to bypass the treatment chamber. This allows removal efficiency to remain relatively constant in the treatment chamber and reduces the risk of washout during bypass flows regardless of influent flow rates.

Treatment flow rates are defined as the rate at which the VortSentry HS will remove a specific gradation of sediment at a specific removal efficiency. Therefore they are variable based on the gradation and removal efficiency specified by the design engineer and the unit size is scaled according to the project goal.

Rational Rainfall Method™

Differences in local climate, topography and scale make every site hydraulically unique. The Rational Rainfall Method is a sizing program Contech uses to estimate a net annual sediment load reduction for a particular VortSentry HS model based on site size, site runoff coefficient, regional rainfall intensity distribution, and anticipated pollutant characteristics. For more information on the Rational Rainfall Method, see *Vortechs Technical Bulletin 4: Modeling Long Term Load Reduction: The Rational Rainfall Method*, available at **www.ContechES.com/stormwater**

Treatment Flow Rate

The outlet flow control is sized to allow the WQQ to pass entirely through the treatment chamber at a water surface elevation equal to the crest of the flow partition. The head equalizing baffle applies head on the outlet flow control to limit the flow through the treatment chamber when bypass occurs, thus helping to prevent re-suspension or re-entrainment of previously captured particles.

Hydraulic Capacity

The VortSentry HS is available in three standard configurations: inline (with inlet and outlet pipes at 180° to each other), grated inlet, and a combination of grate and pipe inlets. All three configurations are available in 36-inch (900-mm) through 96-inch (2400-mm) diameter manholes.

The configuration of the system is determined by the suffix of the model name:

- A model name without a suffix denotes a standard pipe inlet (Example HS48).
- A "G" at the end of the model designation denotes a grate inlet (Example HS48G).
- A "GP" at the end of the model designation denotes a combination of grate and pipe inlets (Example HS48GP).

Performance

Full-Scale Laboratory Test Results

Laboratory testing of the VortSentry HS was conducted using F-55 Silica, a commercially available sand product with an average particle size of 240-μm (Table 1). This material was metered into a model HS48 VortSentry HS at an average concentration of between 250-mg/L and 300-mg/L at flow rates ranging from 0.50-cfs to 1.5-cfs (14-L/s to 56-L/s).

US Standard Sieve Size	Particle Size Micron (μm)	Cumulative Passing %
30	600	99.7%
40	425	95.7%
50	300	74.7%
70	212	33.7%
100	150	6.7%
140	106	0.7%

Table 1 : US Silica F-55 Particle Size Distribution

Removal efficiencies at each flow rate were calculated based on net sediment loads passing the influent and effluent sampling points. Results are illustrated in Figure 1.

Assuming that sediment in the inlet chamber is ideally mixed, removal rates through the system will decay according to the percentage of flow bypassed. This effect has been observed in the laboratory where the test system is designed to produce a

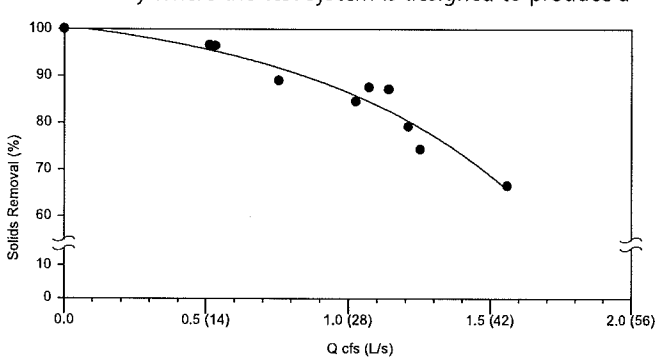

Figure 1: VortSentry HS Removal Efficiencies for 240-μm Particle Gradation

thoroughly mixed inlet stream. All VortSentry HS models have the same aspect ratio regardless of system diameter (i.e. an increase in diameter results in a corresponding increase in depth). Operating rates are expressed volumetrically.

Removal efficiency at each operating rate is calculated according to the average of volumetric and Froude scaling methods and is described by Equation 1.

Equation 1: $$\left(\frac{\text{Diameter Prototype}}{\text{Diameter Model}}\right)^{2.75} = \left(\frac{\text{Flow Rate Prototype}}{\text{Flow Rate Model}}\right)$$

Equation 1 and actual laboratory test results were used to determine the flow rate which would be required for the various VortSentry HS models to remove 80% of solids.

View report at **www.ContechES.com/stormwater**

Maintenance

The VortSentry HS system should be inspected at regular intervals and maintained when necessary to ensure optimum performance. The rate at which the system collects pollutants will depend more heavily on site activities than the size of the unit, i.e., unstable soils or heavy winter sanding will cause the treatment chamber to fill more quickly, but regular sweeping will slow accumulation.

Inspection

Inspection is the key to effective maintenance and is easily performed. Pollutant deposition and transport may vary from year to year and regular inspections will help ensure that the system is cleaned out at the appropriate time. At a minimum, inspections should be performed twice per year (i.e. spring and fall) however more frequent inspections may be necessary in equipment washdown areas and in climates where winter sanding operations may lead to rapid accumulations of a large volume of sediment. It is useful and often required as part of a permit to keep a record of each inspection. A simple inspection and maintenance log form for doing so is available for download at **www.ContechES.com/stormwater**

The VortSentry HS should be cleaned when the sediment has accumulated to a depth of two feet in the treatment chamber. This determination can be made by taking two measurements with a stadia rod or similar measuring device; one measurement from the manhole opening to the top of the sediment pile and the other from the manhole opening to the water surface. If the difference between these measurements is less than the distance given in Table 2, the VortSentry HS should be maintained to ensure effective treatment.

Cleaning

Cleaning of the VortSentry HS should be done during dry weather conditions when no flow is entering the system. Cleanout of the VortSentry HS with a vacuum truck is generally the most effective and convenient method of excavating pollutants from the system. Simply remove the manhole cover and insert the vacuum hose into the sump. All pollutants can be removed from this one access point from the surface with no requirements for Confined Space Entry.

In installations where the risk of petroleum spills is small, liquid contaminants may not accumulate as quickly as sediment. However, an oil or gasoline spill should be cleaned out immediately. Motor oil and other hydrocarbons that accumulate on a more routine basis should be removed when an appreciable layer has been captured. To remove these pollutants, it may be preferable to use adsorbent pads, which solidify the oils. These are usually much easier to remove from the unit individually, and less expensive to dispose than the oil/water emulsion that may be

created by vacuuming the oily layer. Floating trash can be netted out if you wish to separate it from the other pollutants.

Manhole covers should be securely seated following cleaning activities to prevent leakage of runoff into the system from above and also to ensure proper safety precautions. If anyone physically enters the unit, Confined Space Entry procedures need to be followed.

Disposal of all material removed from the VortSentry HS should be done is accordance with local regulations. In many locations, disposal of evacuated sediments may be handled in the same manner as disposal of sediments removed from catch basins or deep sump manholes. Check your local regulations for specific requirements on disposal.

VortSentry HS Model	Diameter		Distance Between Water Surface and Top of Storage Sump		Sediment Storage		Oil Spill Storage	
	in.	m	ft.	m	yd^3	m^3	gal.	liter
HS36	36	0.9	3.6	1.1	0.5	0.4	83	314
HS48	48	1.2	4.7	1.4	0.9	0.7	158	598
HS60	60	1.5	6.0	1.8	1.5	1.1	258	978
HS72	72	1.8	7.1	2.2	2.1	1.6	372	1409
HS84	84	2.1	8.4	2.6	2.9	2.2	649	2458
HS96	96	2.4	9.5	2.9	3.7	2.8	845	3199

Table 2: VortSentry HS Maintenance Indicators and Sediment Storage Capacities.

Note: To avoid underestimating the volume of sediment in the chamber, the measuring device must be carefully lowered to the top of the sediment pile. Finer, silty particles at the top of the pile may be more difficult to feel with the measuring stick. These finer particles typically offer less resistance to the end of the rod than larger particles toward the bottom of the pile.

Logon to **www.ContechES.com/stormwater** to download the VortSentry HS Inspection and Maintenance Log.

For assistance with maintaining your VortSentry HS, contact us regarding the Contech Maintenance compliance certification program.

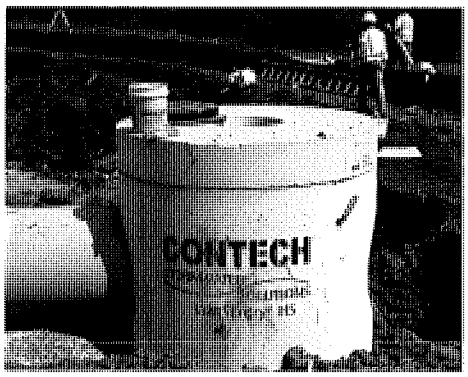

CONTECH®
ENGINEERED SOLUTIONS

©2014 CONTECH ENGINEERED SOLUTIONS, LLC.
800-338-1122
www.ContechES.com

All Rights Reserved. Printed in the USA.

Contech Engineered Solutions LLC provides site solutions for the civil engineering industry. Contech's portfolio includes bridges, drainage, sanitary sewer, stormwater and earth stabilization products. For information on other Contech division offerings, visit ContechES.com or call 800.338.1122

The product(s) described may be protected by one or more of the following US patents: 5,322,629; 5,624,576; 5,707,527; 5,759,415; 5,788,848; 5,985,157; 6,027,639; 6,350,374; 6,406,218; 6,641,720; 6,511,595; 6,649,048; 6,991,114; 6,998,038; 7,186,058; 7,296,692; 7,297,266; related foreign patents or other patents pending.

The Stormwater Management StormFilter, MFS and CDS are trademarks, registered trademarks, or licensed trademarks of Contech Engineered Solutions LLC. LEED is a registered trademark of the U.S. Green Building Council.

NOTHING IN THIS CATALOG SHOULD BE CONSTRUED AS AN EXPRESSED WARRANTY OR AN IMPLIED WARRANTY OF MERCHANTABILITY OR FITNESS FOR ANY PARTICULAR PURPOSE. SEE THE CONTECH STANDARD CONDITIONS OF SALE (VIEWABLE AT WWW.CONTECHES.COM/COS) FOR MORE INFORMATION.

Support

- Drawings and specifications are available at contechstormwater.com.
- Site-specific design support is available from our engineers.

vshs_manual 06/14 PDF IN-HOUSE