PIPING SYMBOLS

- UNION
- FLANGE
- PIPE ANCHOR
- PIPE GUIDE OR SLEEVES
- PIPE ELBOW TURNED DOWN
- PIPE ELBOW TURNED UP
- PIPING TEE–DOWN
- PIPING TEE–UP
- PIPE RISER
- FCO FLOOR CLEAN OUT
- CO CLEAN OUT
- WCO WALL CLEAN OUT
- PIPE PITCHES DOWN
- GATE VALVE
- BALL VALVE
- BUTTERFLY VALVE (MANUAL)
- 2–WAY CONTROL VALVE
- 3–WAY CONTROL VALVE
- MULTI–PURPOSE VALVE
- BALANCING VALVE
- CHECK VALVE
- PLUG VALVE
- GLOBE VALVE
- NEEDLE VALVE
- BACK FLOW PREVENTER
- SOLENOID VALVE
- PRESSURE REDUCING OR REGULATING VALVE
- PRESSURE RELIEF VALVE
- STRAINER W/BLOWDOWN
- STRAINER
- MANUAL AIR VENT
- AUTOMATIC AIR VENT
- PS PRESSURE SWITCH
- FS FLOW SWITCH
- PRESSURE GAUGE AND COCK
- THERMOMETER AND WELL
- TEMPERATURE & PRESSURE TAP (PETE'S PLUG)
- HOSE END DRAIN VALVE WITH CAP
- FLEXIBLE PIPE CONNECTOR
- EXPANSION JOINT
- CONCENTRIC REDUCER/INCREASER
- ECCENTRIC REDUCER/INCREASER
- DIRECTION OF FLOW
- PUMP
- FINNED TUBE BASEBOARD
- DP DIFFERENTIAL PRESSURE TRANSMITTER
- LWC LOW WATER CUT OFF
- TV TEMPERATURE VALVE
- M 3–WAY MOTORIZED VALVE
- TS TEMPERATURE SENSOR
- DRAIN COCK
- VB VACUUM BREAKER
- BFP BACKFLOW PREVENTER
- FZ FREEZE–STAT
- HEATING OR COOLING COIL
- PLEATED FILTER
- PRESSURE DIFFERENTIAL GAUGE
- FAN
- F FUEL OIL FILTER
- LS LEVEL SENSOR
- PEX TO RIGID PIPE CONNECTION
- T THERMOSTAT (T'STAT) OR TEMP. SENSOR
- SD SMOKE DETECTOR
- S SWITCH
- TRAP

AIR DISTRIBUTION SYMBOLS

- 12x16 RECTANGULAR DUCT. (FIRST NUMBER IS SIDE SHOWN) DIMENSIONS IN INCHES
- 12"ø 12 INCH ROUND DUCT
- M MOTORIZED DAMPER
- R RELIEF DAMPER
- FLEXIBLE DUCT
- DUCT FLEXIBLE CONNECTOR
- RETURN DUCT TURNED UP OR DOWN (DASHED)
- SUPPLY DUCT TURNED UP OR DOWN (DASHED)
- EXHAUST DUCT TURNED UP OR DOWN (DASHED)
- ACOUSTICAL LINING (DUCT DIM. FOR NET FREE AREA)
- ROUND DUCT ELBOW DOWN
- ROUND DUCT ELBOW UP
- SQUARE TO ROUND TRANSITION
- CAP (DUCT AND/OR PIPE)
- INDICATES DUCT, PIPING, EQUIPMENT TO BE REMOVED.
- EA EXHAUST AIR
- OA OUTSIDE AIR
- RA RETURN AIR
- SA SUPPLY AIR
- VD VOLUME DAMPER
- FD FIRE DAMPER
- SD SMOKE DAMPER
- SMD COMBINATION SMOKE/FIRE DAMPER
- RECTANGULAR ELBOW W/TURNING VANES
- DIRECTION OF AIR FLOW (SUPPLY)
- DIRECTION OF AIR FLOW (RETURN/EXHAUST)
- H1 / HV-401 — DETAIL NO. / SHEET NO. WHERE DETAIL IS LOCATED
- CUH / 2 — EQUIPMENT TAG / EQUIPMENT NO.
- CONNECT TO EXISTING
- UNDERCUT DOOR
- LOUVERED DOOR

ABBREVIATIONS

AAV	AUTOMATIC AIR VENT
ACU	AIR CONDITIONING UNIT
AD	ACCESS DOOR
AFF	ABOVE FINISHED FLOOR
AHU	AIR HANDLING UNIT
AP	ACCESS PANEL
AS	AIR SEPARATOR
ATC	AUTOMATIC TEMPERATURE CONTROL
AV	AIR VENT
B	BOILER
BB	BASEBOARD
BDD	BACKDRAFT DAMPER
BG	BLAST GATE
BFP	BACKFLOW PREVENTER
BLDG	BUILDING
BOD	BOTTOM OF DUCT
BOP	BOTTOM OF PIPE
BTU	BRITISH THERMAL UNIT
C	CONDENSATE
CAS	COMBUSTION AIR SYSTEM
CC	COOLING COIL
CD	CONDENSATE DRAIN
CFF	CAPPED FOR FUTURE
CFM	CUBIC FEET PER MINUTE
CGD	COMBUSTION GAS DETECTION
CLG	CEILING
CO	CLEANOUT
CONT	CONTINUATION
COORD	COORDINATE
CTE	CONNECT TO EXISTING
CU	CONDENSING UNIT
CUH	CABINET UNIT HEATER
CV	CONTROL VALVE
CW	COLD WATER
DC	DUCT COIL
DDC	DIRECT DIGITAL CONTROL
DIA	DIAMETER
DN	DOWN
DWG	DRAWING
DWH	DOMESTIC WATER HEATER
EA	EXHAUST AIR
EF	EXHAUST FAN
ER	EXHAUST REGISTER
ERV	ENERGY RECOVERY UNIT
ET	EXPANSION TANK
ETR	EXISTING TO REMAIN
EXIST.	EXISTING
FBO	FURNISHED BY OWNER
FC	FLEXIBLE CONNECTION
FCV	FLOW CHECK VALVE
FCU	FAN COIL UNIT
FCO	FLOOR CLEANOUT
FD	FIRE DAMPER
FG	FIBERGLASS
FT	FINNED TUBE RADIATION
FS	FLOW SWITCH
GC	GENERAL CONTRACTOR
GPM	GALLONS PER MINUTE
HB	HOSE BIBB
HC	HEATING COIL
HP	HEAT PUMP
HRU	HEAT RECOVERY UNIT
HTR	HEATER
H & V	HEATING AND VENTILATION
HVAC	HEATING, VENTILATING AND AIR CONDITIONING
HW	HOT WATER
HX	HEAT EXCHANGER
IH	INTAKE HOOD
IN. W.G.	INCHES WATER GAUGE
IV	INTAKE VENT
L	LOUVER
LD	LINED DUCT
LSD	LINEAR SLOT DIFFUSER
M	MOTOR OPERATED DAMPER (MOD)
MAU	MAKE UP AIR UNIT
MAX	MAXIMUM
MBH	1000 BTU/HR.
ME	MECHANICAL ENGINEER
MFGR	MANUFACTURER
MIN	MINIMUM
MPV	MULTI–PURPOSE VALVE
MTD	MOUNTED
MUA	MAKE UP AIR
NPW	NON–POTABLE WATER
NTS	NOT TO SCALE
OA	OUTSIDE AIR
OED	OPEN ENDED DUCT
OBD	OPPOSED BLADE DAMPER
OSV	OIL SAFETY VALVE
P	PUMP
PL	PLUMBING
PRV	PRESSURE REDUCING VALVE
R	RELIEF VENT
RA	RETURN AIR
RF	RETURN FAN
RG	RETURN GRILLE
RH	RELIEF HOOD
RHC	REHEAT COIL
RM	ROOM
RPZ	REDUCED PRESSURE ZONE BFP
RR	RETURN REGISTER
RV	RELIEF VALVE
S	SANITARY
SA	SUPPLY AIR
SCV	SELF CONTAINED VALVE
SD	SMOKE DETECTOR
SF	SUPPLY FAN
SG	SUPPLY GRILLE
SR	SUPPLY REGISTER
SS	STAINLESS STEEL
TG	TRANSFER GRILLE
TDV	TRIPLE DUTY VALVE
TMV	TEMPERATURE MIXING VALVE
TOD	TOP OF DUCT
TOP	TOP OF PIPE
TTS	TIGHT TO STEEL
TV	TURNING VANE(S)
TYP	TYPICAL
UH	UNIT HEATER
UIC	UP IN CHASE
UIW	UP IN WALL
UNO	UNLESS NOTED OTHERWISE
UV	UNIT VENTILATOR
V	VENT
VAV	VARIABLE AIR VOLUME
VB	VACUUM BREAKER
VTR	VENT THRU ROOF
VD	VOLUME DAMPER
VCFF	VALVED AND CAPPED FOR FUTURE
VFD	VARIABLE FREQUENCY DRIVE
VS	VARIABLE SPEED
W	WASTE
W/	WITH
WCO	WALL CLEANOUT
WH	WALL HYDRANT
WMS	WIRE MESH SCREEN

HVAC GENERAL DRAWING NOTES:

1. CARE SHALL BE EXERCISED TO MINIMIZE ANY INCONVENIENCE OR DISTURBANCE TO OTHER AREAS OF THE BUILDING WHICH ARE TO REMAIN IN OPERATION. ISOLATE WORK AREAS BY MEANS OF TEMPORARY PARTITIONS AND/OR TARPS TO KEEP DUST WITHIN THE CONSTRUCTION AREA.

2. NO PIPING, EQUIPMENT, ETC. SHALL BE REMOVED, DISCONNECTED OR SHUT DOWN WITHOUT PRIOR REVIEW WITH THE OWNER AND/OR ENGINEER TO CONFIRM THAT AREAS TO REMAIN IN OPERATION WILL NOT BE AFFECTED. IF ANY AREAS NOT WITHIN THE SCOPE OF WORK ARE AFFECTED BY ANY SHUTDOWN, REMOVAL OR DISCONNECTION, 1 WEEK ADVANCE NOTICE MUST BE GIVEN TO THE OWNER INDICATING WHICH AREAS WILL BE AFFECTED, WHEN THE PROPOSED SHUTDOWN WILL OCCUR, AND FOR HOW LONG A PERIOD OF TIME.

3. ALL ITEMS REMOVED SHALL BECOME THE PROPERTY OF THE OWNER AND SHALL BE DISPOSED OF AS PER THE OWNERS INSTRUCTIONS, UNLESS INDICATED OTHERWISE. ALL ITEMS WHICH ARE NOT TO BE STORED ON SITE SHALL BE REMOVED FROM THE BUILDING IMMEDIATELY.

4. THE CONTRACTOR SHALL FIELD VERIFY ALL DIMENSIONS AND EXISTING CONDITIONS PRIOR TO PROCEEDING WITH ANY WORK. WHERE DISCREPANCIES OCCUR BETWEEN THESE DOCUMENTS AND EXISTING CONDITIONS, THE DISCREPANCY SHALL BE REPORTED TO THE OWNER AND/OR ENGINEER FOR EXPEDITING AND RESOLUTION.

5. ALL SHUT DOWNS OF EXISTING SYSTEMS SHALL BE SCHEDULED AND APPROVED BY THE OWNER PRIOR TO COMMENCING WITH WORK.

6. EXISTING MATERIALS THAT ARE REMOVED SHALL NOT BE REUSED IN NEW SYSTEMS, EXCEPT WHERE INDICATED AS SUCH ON THE DRAWINGS.

7. PROVIDE ALL NECESSARY TEMPORARY OR PERMANENT CAPS OR PLUGS FOR PIPING AND DUCTWORK. DO NOT LEAVE PIPING AND/OR DUCTWORK OPEN ENDED.

8. THE CONTRACTOR SHALL COORDINATE HIS WORK WITH ALL OTHER TRADES PRIOR TO FABRICATION, PURCHASE AND/OR INSTALLATION OF HVAC WORK. ALL OFFSETS IN PIPING AND DUCTS TO AVOID OBSTRUCTIONS SHALL BE PROVIDED AT NO COST TO THE OWNER.

9. PROVIDE ACCESS PANELS FOR ALL CONCEALED DAMPERS, VALVES AND EQUIPMENT.

10. IF A SECTION OF DUCT OR PIPE IS NOT LABELED FOR SIZE, THAN THE LARGER SIZE INDICATED ON THE DRAWINGS SHALL PREVAIL. SIZE OF DUCT RUN–OUTS TO DIFFUSERS SHALL EQUAL THE DIFFUSER NECK SIZE.

11. DUCT AND PIPE SHALL NOT RUN ALONG FULL HEIGHT PARTITIONS.

12. ALL PIPING SHALL BE INSTALLED AS INDICATED ON THE DRAWINGS AND BE SUPPORTED AS REQUIRED BY CODES. PIPING SHALL BE SET UP AND DOWN AND OFFSET AS REQUIRED TO SUIT FIELD CONDITIONS. DIELECTRIC COUPLINGS SHALL BE USED WHERE DISSIMILAR METALS ARE JOINED.

13. THE CONTRACTOR SHALL PROVIDE ALL TEMPERATURE CONTROLS INCLUDING WIRING, TUBING AND THERMOSTATS AND ALL MISCELLANEOUS APPURTENANCES TO MEET THE INTENT OF THESE DOCUMENTS. PROTECT EXISTING THERMOSTATS AND INSTALL NEW AT 4.5 FEET AFF.

14. ALL WORK IS TO BE PERFORMED IN STRICT COMPLIANCE WITH LAWS AND REGULATIONS GOVERNING WORK OF THIS NATURE.

15. THE MECHANICAL PLANS ARE INTENDED TO BE DIAGRAMATIC AND ARE BASED ON ONE MANUFACTURER'S EQUIPMENT. THEY ARE NOT INTENDED TO SHOW THE EXACT ROUTING OF SYSTEMS OR LOCATION OF COMPONENTS. THE EXACT LOCATIONS, DIMENSIONS AND ALL OTHER DETAILS OF EQUIPMENT ARE THE RESPONSIBILITY OF THIS CONTRACTOR. THIS CONTRACTOR SHALL VERIFY THE ACTUAL DIMENSIONS OF THE EQUIPMENT PROPOSED TO ENSURE THAT THE EQUIPMENT WILL FIT IN THE AVAILABLE SPACE. PROVIDE ALL DUCT AND PIPE TRANSITIONS REQUIRED FOR CONNECTION TO EQUIPMENT.

16. THE FIRE PROOFING OF THE EXISTING STRUCTURE IS NOT TO BE REMOVED FOR THE INSTALLATION OF HANGERS, SUPPORTS AND DUCTWORK, ETC. IF FIRE PROOFING IS DAMAGED, IT SHALL BE REPAIRED AT THE EXPENSE OF THE TRADE.

PIPING DESIGNATIONS

C	CONDENSATE
CD	CONDENSATE DRAIN
CHWR	CHILLED WATER RETURN
CHWS	CHILLED WATER SUPPLY
CWR	CONDENSER WATER RETURN
CWS	CONDENSER WATER SUPPLY
CW	COLD WATER
DCW	DOMESTIC COLD WATER
DHW	DOMESTIC HOT WATER
F.O.R.	FUEL OIL RETURN
F.O.S.	FUEL OIL SUPPLY
HPS	HIGH PRESSURE STEAM
HWR	HOT WATER RETURN
HWS	HOT WATER SUPPLY
LPS	LOW PRESSURE STEAM
MPS	MEDIUM PRESSURE STEAM
RG	REFRIGERANT GAS
RL	REFRIGERANT LIQUID
S	SANITARY
V	VENT

NOTE:

SYMBOLS AND ABBREVIATIONS SHOWN ON THIS SHEET ARE GENERAL AND MAY NOT HAVE BEEN USED ON THIS PROJECT.

ISSUED FOR BID

WOODARD & CURRAN
980 Washington Street, Suite 325
Dedham, Massachusetts 02026
800.446.5518 | www.woodardcurran.com
COMMITMENT & INTEGRITY DRIVE RESULTS

THIS DOCUMENT IS THE PROPERTY OF WOODARD & CURRAN INC. AND ITS CLIENT. REPRODUCTION OR MODIFICATION WITHOUT WRITTEN PERMISSION IS PROHIBITED.

COMMONWEALTH OF MASSACHUSETTS — MARK JACOBS MECHANICAL NO. 45594 — REGISTERED PROFESSIONAL ENGINEER — 9/20/16

REV	DESCRIPTION	DATE

DESIGNED BY: MJ
DRAWN BY: DMB
CHECKED BY: MJ
22912300-H-001.dwg

HVAC LEGEND

DEPARTMENT OF PUBLIC WORKS
NANTUCKET, MASSACHUSETTS

SURFSIDE WASTEWATER TREATMENT FACILITY UPGRADES

JOB NO.: 229123.00
DATE: SEPTEMBER 2016
SCALE: AS NOTED
SHEET: 73 OF 116

H-001

22x34 SHEET 1:1

\\woodardcurran.net\shared\Projects\229123 Nantucket MA Surfside WWTF Upgrades 2015–2016\wip\Drawings\HVAC\22912300–H–001.dwg, Sep 20, 2016 – 3:34pm

22x34 SHEET
1:1

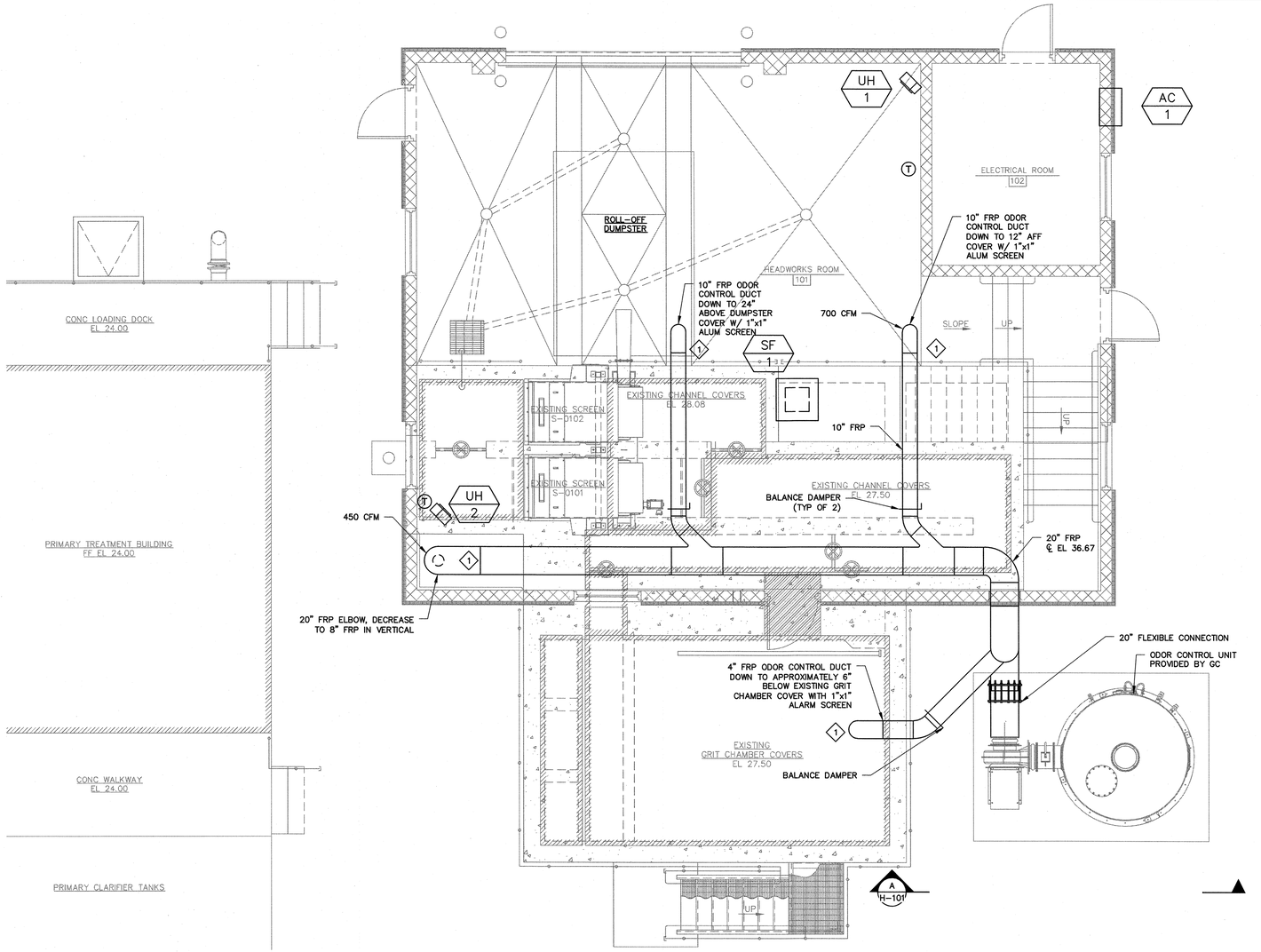

KEYED NOTES

1. PROVIDE ISOLATION DAMPER ON EACH VERTICAL LEG OF ODOR CONTROL DUCTWORK. DAMPER SHALL BE LOCATED 3'-6" AFF OR AT A LOCATION EASILY ACCESSIBLE FOR OPERATOR.

GENERAL NOTES

1. ALL ODOR CONTROL FRP DUCTWORK FROM THE CONNECTION OF THE ODOR CONTROL UNIT AND INCLUDING ALL SUCTION INTAKES SHALL BE PROVIDED BY THE HVAC SUB CONTRACTOR. ALL FRP DUCTWORK SHALL BE APPROVED BY THE ODOR CONTROL UNIT MANUFACTURER.
2. PROVIDE DUCT SUPPORTS AS SPECIFIED IN SECTION 23 31 17 SUPPORTS NOT SHOWN FOR CLARITY.

NOTE:
ALL WORK ON THIS SHEET IS PART OF BID ALTERNATE #1.

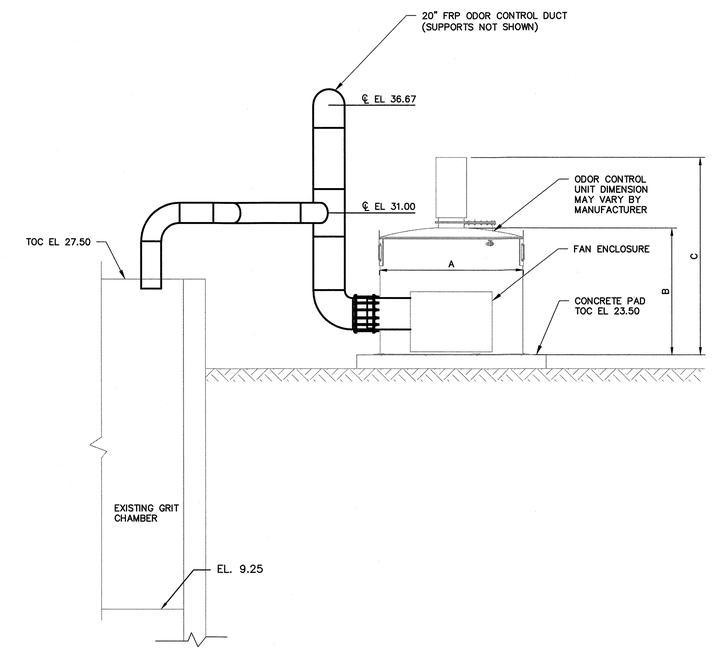

SECTION A H-101
SCALE: 1/4" = 1'-0"

6' 4' 2' 0 4' 8'
BAR SCALE
1/4" = 1'-0"
CHECK GRAPHIC SCALE BEFORE USING

ISSUED FOR BID

980 Washington Street, Suite 325
Dedham, Massachusetts 02026
800.446.5518 | www.woodardcurran.com
WOODARD & CURRAN
COMMITMENT & INTEGRITY DRIVE RESULTS

THIS DOCUMENT IS THE PROPERTY OF WOODARD & CURRAN INC. AND ITS CLIENT. REPRODUCTION OR MODIFICATION WITHOUT WRITTEN PERMISSION IS PROHIBITED.

COMMONWEALTH OF MASSACHUSETTS
MARK JACOBS
MECHANICAL
NO. 45594
REGISTERED PROFESSIONAL ENGINEER
9/23/16

REV	DESCRIPTION	DATE

DESIGNED BY: MJ
DRAWN BY: DMB
CHECKED BY: MJ
22912300-H-101.dwg

BID ALTERNATE #1
HEADWORKS BUILDING
HVAC FLOOR PLAN

DEPARTMENT OF PUBLIC WORKS
NANTUCKET, MASSACHUSETTS

SURFSIDE WASTEWATER TREATMENT FACILITY UPGRADES

JOB NO.: 229123.00
DATE: SEPTEMBER 2016
SCALE: AS NOTED
SHEET: 74 OF 116

H-101

\\woodardcurran.net\shared\Projects\229123 Nantucket MA Surfside WWTF Upgrades 2015-2016\wip\Drawings\HVAC\22912300-H-101.dwg, Sep 20, 2016 - 3:36pm

22x34 SHEET
1:1

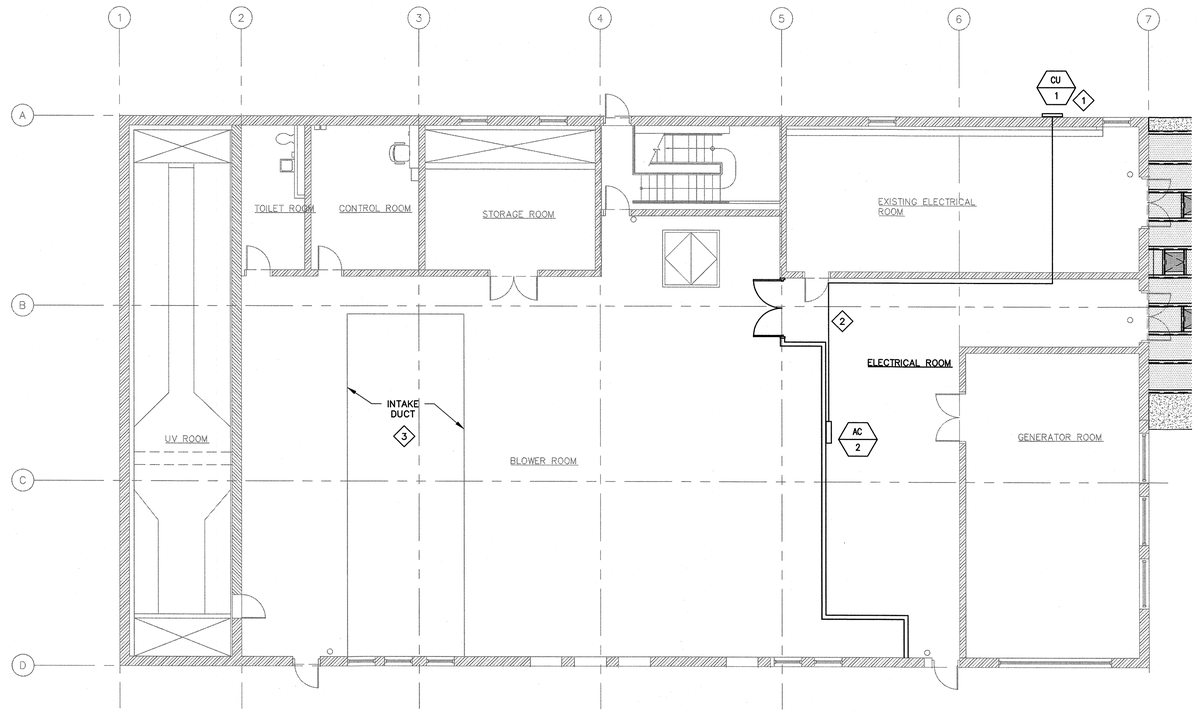

ADVANCED TREATMENT BUILDING GROUND FLOOR HVAC PLAN

SCALE: 1/8" = 1'-0"

KEYED NOTES

1. LOCATE CONDENSING UNIT ON WALKWAY NEXT TO BUILDING. COORDINATE LOCATION WITH OWNER.
2. INSTALL REFRIGERANT LINES AS HIGH AS POSSIBLE.
3. DEMOLISH EXISTING INTAKE DUCT TO WALL TO EXPOSE EXISTING LOUVER(S).

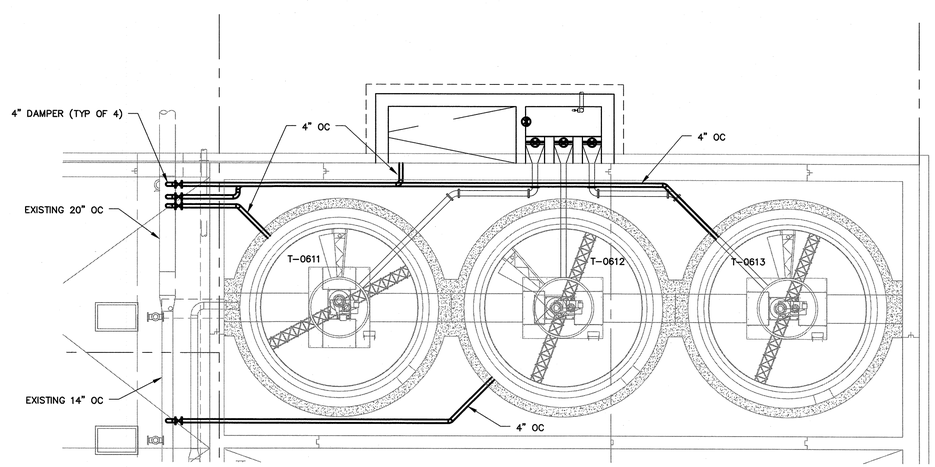

BID ALTERNATE #4

NOTE:
4" ODOR CONTROL DUCTS FROM THE GRAVITY THICKENERS TO THE EXISTING 20" DUCT LOCATED INSIDE THE ADVANCED TREATMENT BUILDING IS INCLUDED AS PART OF BID ALTERNATE #4.

ADVANCED TREATMENT BUILDING ODOR CONTROL PLAN

SCALE: 3/16" = 1'-0"

12' 8' 4' 0 8' 16'

BAR SCALE
1/8" = 1'-0"
CHECK GRAPHIC SCALE BEFORE USING

ISSUED FOR BID

980 Washington Street, Suite 325
Dedham, Massachusetts 02026
800.446.5518 | www.woodardcurran.com

COMMITMENT & INTEGRITY DRIVE RESULTS

WOODARD & CURRAN

THIS DOCUMENT IS THE PROPERTY OF WOODARD & CURRAN INC. AND ITS CLIENT. REPRODUCTION OR MODIFICATION WITHOUT WRITTEN PERMISSION IS PROHIBITED.

9/23/16
COMMONWEALTH OF MASSACHUSETTS
MARK JAMES MICHAUD
NO. 45594
REGISTERED PROFESSIONAL ENGINEER

REV	DESCRIPTION	DATE

DESIGNED BY: MJ | CHECKED BY: MJ
DRAWN BY: DMB | 229123000-H-301.dwg

ADVANCED TREATMENT BUILDING
GROUND FLOOR HVAC AND ODOR CONTROL PLAN

DEPARTMENT OF PUBLIC WORKS
NANTUCKET, MASSACHUSETTS

SURFSIDE WASTEWATER TREATMENT FACILITY UPGRADES

JOB NO.: 229123.00
DATE: SEPTEMBER 2016
SCALE: AS NOTED
SHEET: 75 OF 116

H-301

\\woodardcurran.net\shared\Projects\229123 Nantucket MA Surfside WWTF Upgrades 2015-2016\wip\Drawings\HVAC\229123-H-301.dwg, Sep 20, 2016 - 3:34pm

22x34 SHEET
1:1

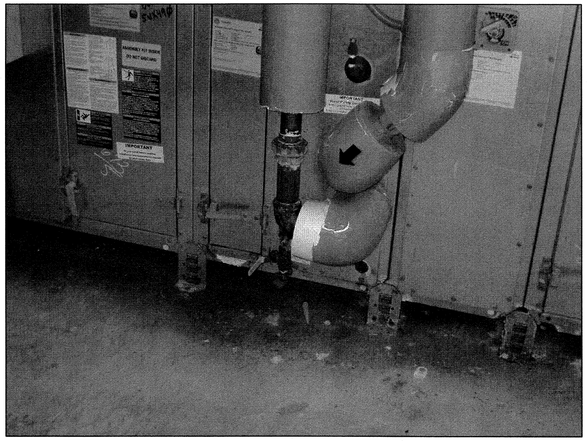

FIG 1

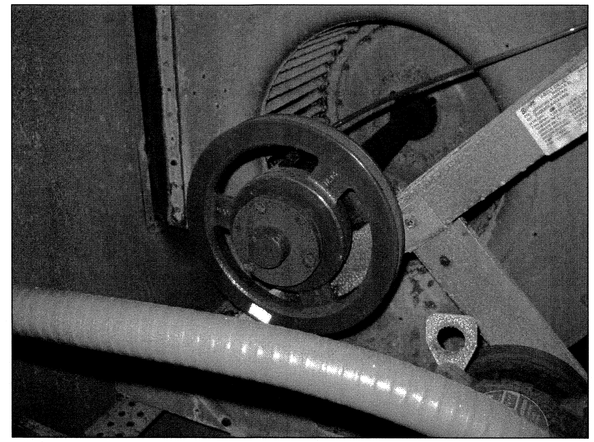

FIG 2

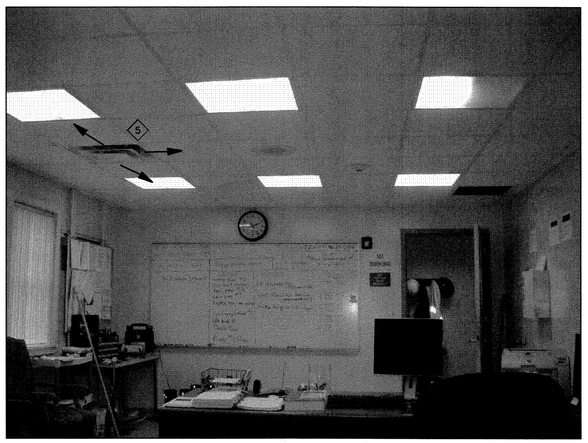

FIG 3 – CONTROL ROOM CEILING

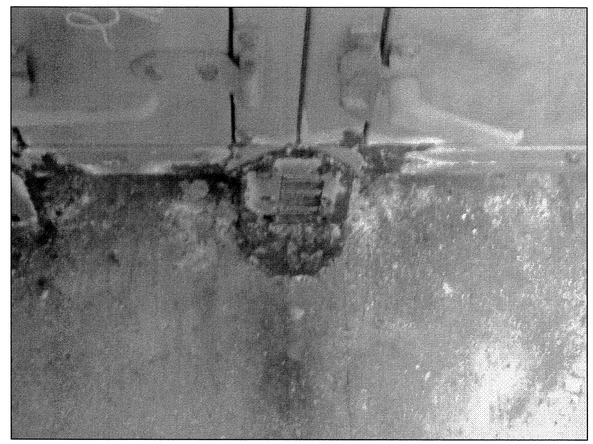

FIG 4

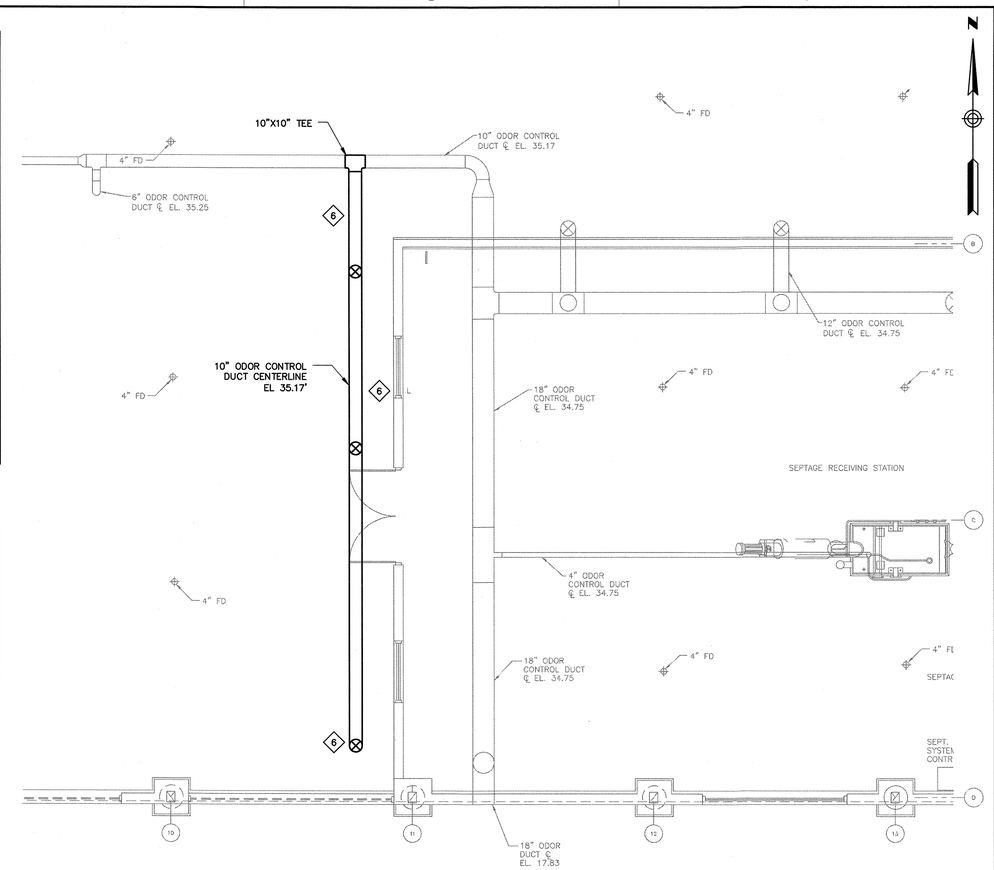

SOLIDS PROCESSING BUILDING PARTIAL PLAN
SCALE: 3/16" = 1'-0"

KEYED NOTES

1. REPAIR MAU NEAR CEILING AND RETURN TO SERVICE. FOLLOW NOTE 2 BELOW.
2. CLEAN ALL CORROSION FROM INTERIOR COMPARTMENTS. REPLACE PULLEYS, FILTERS, CORRODED HARDWARE AS NEEDED. CLEAN & FLUSH HOT WATER SYSTEM & REPLACE WATER/GLYCOL FLUID. REPLACE HOT WATER COIL WITH NEW COIL OF EQUAL RATING. NEW COIL TO BE COATED FOR CORROSION RESISTANCE IN A MARINE (SEACOAST) APPLICATION. SUBMIT TO ENGINEER FOR APPROVAL. ALL HARDWARE SHALL BE MARINE GRADE (316L – STAINLESS STEEL). REPLACEMENT MOTORS SHALL BE RATED FOR SEVERE CHEMICAL DUTY SERVICE. REPLACEMENT DAMPERS & DAMPER OPERATORS SHALL BE DESIGNED FOR MARINE DUTY AND FURNISHED COMPLETE WITH COATINGS AND/OR PAINT SUITABLE FOR THE ENVIRONMENT.
3. CLEAN CORROSION FROM EXTERIOR OF BOTH UNITS. PAINT LEGS AND ALL OTHER EXPOSED CORRODED METAL ON THE UNITS WITH 1 COAT OF CORROSION PREVENTATIVE PRIMER AND ONE TOP COAT AS SPECIFIED IN DIVISION 09. COLOR SHALL BE GRAY, AS CLOSE AS POSSIBLE TO THE COLOR OF THE UNIT HOUSING. CLEAN CORRODED PIPE AS SEEN IN FIG 1. PAINT AS ABOVE & REPAIR INSULATION. PAINT INSULATION TO MATCH EXISTING.
4. REPLACE CEILING DIFFUSERS IN CEILING OF CONTROL ROOM BELOW. SEE FIG 3. REPLACE WITH TITUS TDV OR APPROVED EQUAL, WHITE, 3-WAY BLOW, 15"x15" WITH OPPOSED BLADE DAMPER. PROVIDE INSERTS TO ALLOW DIFFUSER TO FIT INTO EXISTING SUSPENDED CEILING. INSTALL AS SHOWN IN FIG 3.
5. INSTALL CONTROL ROOM VENTILATION WITH AIR DIRECTION AS SHOWN IN FIGURE 3.
6. 10"ø ODOR DUCT VERTICAL TO 12" AFF WITH ISOLATION DAMPER AT 3'-6" ABOVE FINISHED FLOOR (TYP OF 3).

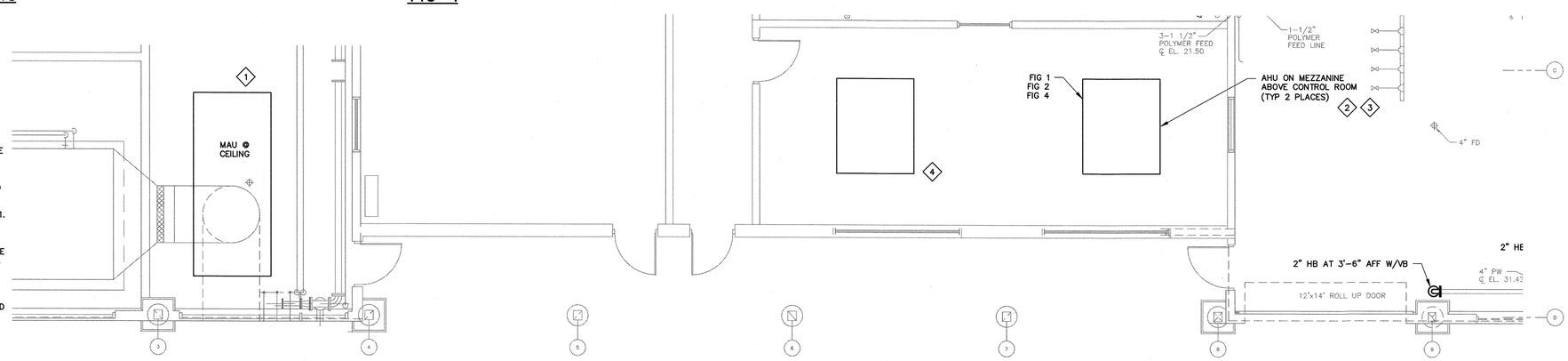

SOLIDS PROCESSING BUILDING PARTIAL PLAN
SCALE: 3/16" = 1'-0"

6' 4' 2' 0 4' 8'
BAR SCALE
3/16" = 1'-0"
CHECK GRAPHIC SCALE BEFORE USING

ISSUED FOR BID

980 Washington Street, Suite 325
Dedham, Massachusetts 02026
800.446.5518 | www.woodardcurran.com

COMMITMENT & INTEGRITY DRIVE RESULTS

WOODARD & CURRAN

THIS DOCUMENT IS THE PROPERTY OF WOODARD & CURRAN INC. AND ITS CLIENT. REPRODUCTION OR MODIFICATION WITHOUT WRITTEN PERMISSION IS PROHIBITED.

MASSACHUSETTS REGISTERED PROFESSIONAL ENGINEER MARK J. COSTA No. 45504 9/23/16

REV	DESCRIPTION	DATE

DESIGNED BY: MJ | CHECKED BY: MJ
DRAWN BY: DMB | 229123.00-H-401.dwg

SOLIDS PROCESSING BUILDING
HVAC PLANS & SECTIONS

DEPARTMENT OF PUBLIC WORKS
NANTUCKET, MASSACHUSETTS

SURFSIDE WASTEWATER
TREATMENT FACILITY
UPGRADES

JOB NO.: 229123.00
DATE: SEPTEMBER 2016
SCALE: AS NOTED
SHEET: 76 OF 116

H-401

\\woodardcurran.net\shared\Projects\229123 Nantucket MA Surfside WWTF Upgrades 2015-2016\wip\Drawings\HVAC\229123.00-H-401.dwg, Sep 20, 2016 - 3:37pm

22x34 SHEET
1:1

UNIT HEATER SCHEDULE (ELECTRIC)

UNIT NO.	TYPE	CFM	TOTAL MBH	FINAL AIR TEMP. (F°) RISE	FAN MOTOR HP	FAN RPM	ELECTRIC CHAR.				MANUFACTURER & MODEL NO.	REMARKS
							KW	V	PH	Hz		
UH-1	ELECTRIC	850	–	28	¼	1725	7.5	480	3	60	INDEECO 233-FA-0086U	1,2,3,4,5
UH-2	ELECTRIC	850	–	28	¼	1725	7.5	480	3	60	INDEECO 233-FA-0086U	1,2,3,4,5

1. FURNISHED AND INSTALLED BY HVAC SUBCONTRACTOR, WIRED BY ELECTRICAL SUBCONTRACTOR
2. PROVIDE LOCAL DISCONNECT SWITCH
3. PROVIDE WALL MOUNTED EXPLOSION PROOF THERMOSTAT, COORDINATE LOCATION WITH OWNER
4. UNIT HEATERS SHALL BE EXPLOSION PROOF. FM AND CSA APPROVED FOR CLASS 1, DIV1 &2 SERVICE.
5. UNIT HEATERS SHALL BE OPTION C2, DIRTY DUTY, CHEMICAL RESISTANT HERESITE COATED.

FAN SCHEDULE

FAN NO.	LOCATION	SERVICE	CFM	E.S.P. (IN W.G.)	FAN RPM	O.V. FPM	SONES	DRIVE TYPE	FAN TYPE	MOTOR						MANUFACTURER & MODEL NO.	REMARKS
										RPM	BHP	HP	V	HP	Hz		
SF-1	HEADWORKS	SUPPLY	1700	.25	378	828	–	BELT	CENT. FC	–	.14	1/4	–	–	–	COOK MODEL 150 ASP	1,2,3,4

1. PROVIDE LOCAL DISCONNECT SWITCH.
2. PROVIDE 13-1/2" HIGH PRE-FAB SLOPED ROOF CURB .
3. 19-1/2"x19-1/2" ROOF OPENING REQUIRED.
4. EXPLOSION PROOF MOTOR, THERMOSTAT & DISCONNECT SWITCH.

AIR CONDITIONING SCHEDULE

UNIT NO.	SERVICE	COOLING CAPACITY (BTU/HR)	HEATING CAPACITY (BTU/HR)	CFM	SEER	ELEC. CHARAC.			MANUFACTURER & MODEL NO.	REMARKS
						V	PH	Hz		
AC-1	HEADWORKS ELECT ROOM	7500	3850	775	11	115	1	60	FRIEDRICH EP08G11B	5
AC-2	ADV. TRTMT ELECTRIC ROOM	24000			17.0	208	1	60	MITSUBISHI ELECTRIC PKA-A24KA4	1,2,3,4

1. PROVIDE INDOOR UNIT WITH UNIT MOUNTED DISCONNECT SWITCH AND FILTERS.
2. INDOOR UNIT SHALL RECEIVE POWER FROM OUTDOOR UNIT THRU FIELD SUPPLIED INTERCONNECTED WIRING, COORDINATE WITH ELECTRICAL CONTRACTOR.
3. MECHANICAL CONTRACTOR SHALL SIZE REFRIGERANT LIQUID & SUCTION PIPING BASED ON ACTUAL PIPE RUN FROM EVAPORATOR UNIT TO CONDENSING UNIT.
4. PROVIDE INDOOR UNIT WITH SAUERMANN MINI CONDENSATE PUMP. ROUTE CONDENSATE LINE TO NEAREST DRAIN OR TO EXTERIOR OF THE BUILDING.
5. PROVIDE WALL SLEEVE.

CONDENSING UNIT SCHEDULE

UNIT NO.	SERVICE	WEIGHT (LBS)	COMPRESSOR		ELECTRICAL CHARACTERISTICS					MANUFACTURER & MODEL NUMBER	REMARKS
			TYPE	REFRIGERANT	V	PH	Hz	MCA	MOCP		
CU-1	AC-2	163	VARIABLE	R410A	208	1	60	25	40	MITSUBISHI ELECTRIC PUY-A24NHA3	1,2,3

1. TOTAL COOLING POWER INPUT (KW) – 2.27
2. PROVIDE DIAMONDBACK PLATFORM STANDS MODEL DSD-400N
3. PROVIDE ULTRALITEZ CONDENSING UNIT MOUNTING PAD: 24"x42"x3"

ISSUED FOR BID

980 Washington Street, Suite 325
Dedham, Massachusetts 02026
800.446.5518 | www.woodardcurran.com

COMMITMENT & INTEGRITY DRIVE RESULTS

WOODARD & CURRAN

THIS DOCUMENT IS THE PROPERTY OF WOODARD & CURRAN INC. AND ITS CLIENT. REPRODUCTION OR MODIFICATION WITHOUT WRITTEN PERMISSION IS PROHIBITED.

COMMONWEALTH OF MASSACHUSETTS
MARK JACOBS
MECHANICAL
NO. 45594
REGISTERED PROFESSIONAL ENGINEER
9/23/16

REV	DESCRIPTION	DATE

DESIGNED BY: MJ
DRAWN BY: DMB
CHECKED BY: MJ
229123.00-H-801.dwg

HVAC SCHEDULES AND DETAILS

DEPARTMENT OF PUBLIC WORKS
NANTUCKET, MASSACHUSETTS

SURFSIDE WASTEWATER TREATMENT FACILITY UPGRADES

JOB NO.: 229123.00
DATE: SEPTEMBER 2016
SCALE: AS NOTED
SHEET: 77 OF 116

H-801

\\woodardcurran.net\shared\Projects\229123 Nantucket MA Surfside WWTF Upgrades 2015-2016\wip\Drawings\HVAC\229123-H-801.dwg, Sep 21, 2016 - 6:54pm

22x34 SHEET
1:1

GENERAL

- P1-## — HOME RUN. ARROWS INDICATE NUMBER OF CIRCUITS, CROSS LINES INDICATE NUMBER OF WIRES, OTHER THAN TWO (2) PLUS BOND, WIRE SIZE NOT SHOWN INDICATES #12AWG MIN.
  - INDICATES CIRCUIT NUMBER
  - PANEL DESIGNATION
- WIRING IN RACEWAY
- WIRING IN RACEWAY CONCEALED UNDERGROUND OR UNDERSLAB, MINIMUM 3/4"C
- UG — WIRING IN RACEWAY CONCEALED UNDERGROUND, MINIMUM 3/4"C
- 3/C #nn W/GND, EquipNo-P — CONDUIT AND CABLE ID TAG
- CONDUIT TURNING UP
- CONDUIT TURNING DOWN
- CONDUIT STUB
- EY CONDUIT SEAL
- FLEXIBLE NON-METALLIC CONDUIT
- PANELBOARD
- CP — CONTROL PANEL
- ATC — AUTOMATIC TEMPERATURE CONTROL PANEL (BY DIV 23)
- ISBP — INTRINSIC SAFETY BARRIER PANEL
- HT — HEAT TRACE CONTROLLER
- POWER COMPANY METER
- HS H/O/A — LOCAL SELECTOR SWITCH
  - H/O/A – HAND/OFF/AUTO
  - H/O/R – HAND/OFF/REMOTE
  - L/O/R – LOCAL/OFF/REMOTE
- PUSHBUTTON STATION, WITH "EM" EMERGENCY
- J — JUNCTION BOX
- MD — MOTORIZED DAMPER
- T — THERMOSTAT
- R — RELAY
- BT — DOOR BELL/BUZZER AND TRANSFORMER – MTD CL UP 7'-0" AFF
- X-# / EQUIP# — EQUIPMENT TAGS
- X — KEYED NOTE TAG
- X — REVISION TRIANGLE
- BRACKET

POWER

- NON-FUSED SAFETY SWITCH
- F — FUSED SAFETY SWITCH
- NON-FUSED DISCONNECT/MAGNETIC MOTOR STARTER
- M — MANUAL MOTOR SWITCH (MOTOR RATED SWITCH), TOGGLE OPERATED, SINGLE PHASE. 1 OR 2 POLE AS REQUIRED
- CB 100A — ENCLOSED CIRCUIT BREAKER W/AMPERE RATING
- M — ELECTRIC MOTOR, NUMBER INDICATES HORSEPOWER RATING, "F" INDICATES FRACTIONAL LESS THAN 1/20HP OR 100W
- T — TRANSFORMER
- P — POWER POLE
- DUPLEX RECEPTACLE, NEMA 5-20R – MTD CL UP 24" OR AS NOTED."WP" WEATHER PROOF, "G" PROTECTED BY GFCI RECEPTACLE OR BREAKER UPSTREAM, "H" MOUNTED 0'-6" BELOW CEILING, "TV" MOUNT 7'-6" UP
- DOUBLE DUPLEX RECEPTACLE, NEMA 5-20R – MTD CL UP 24" OR AS NOTED
- SINGLE RECEPTACLE, NEMA 5-20R – MTD CL UP 24" OR AS NOTED
- GFCI DUPLEX RECEPTACLE, NEMA 5-20R – MOUNTED CL UP 48" OR 6" ABOVE COUNTER
- DOUBLE DUPLEX GFCI RECEPTACLE, NEMA 5-20R – MOUNTED CL UP 48" OR 6" ABOVE COUNTER
- FLUSH FLOOR OUTLET, DUPLEX RECEPTACLE, NEMA 5-20R
- MULTI SERVICE FLUSH FLOOR BOX WITH DUPLEX RECEPTACLE AND PROVISIONS FOR DATA
- POWER RECEPTACLE, NEMA CONFIGURATION AS NOTED OR AS REQUIRED FOR EQUIPMENT SERVED.
- FLUSH CEILING MTD DEVICE BOXES, ONE W/ DUPLEX RCPT FOR PROJECTOR POWER AND ONE FOR DATA TO SERVE OH PROJECTOR. RUN ONE 1 1/2"C TO JBOX LOCATED AT FRONT OF ROOM FOR PROJECTOR CABLE PATHWAY. VERIFY FINAL LOCATION W/ OWNER PRIOR TO ROUGH IN.
- MULITI-OUTLET POWER STRIP, MOUNT 0'-6" ABOVE COUNTERTOP, RECEPTACLE SPACING AS NOTED.

MISCELLANEOUS

- B / 80.01 — DETAIL #, SHEET # — SECTION CALL OUT
- DETAIL TITLE, 1 / X-0X — DETAIL CALL OUT

LIGHTING

- 2x4 FLUORESCENT FIXTURE
  - Ab — ASSOCIATED CONTROL DEVICE
  - FIXTURE TYPE (SEE LIGHT FIXTURE SCHEDULE)
- 1x4 FLUORESCENT FIXTURE
- 2x2 FLUORESCENT FIXTURE
- FIXTURE WIRED TO UNSWITCHED NORMAL CIRCUIT
- FIXTURE WIRED TO UNSWITCHED EMERGENCY CIRCUIT
- FIXTURE WIRED TO SWITCHED EMERGENCY CIRCUIT
- DOWN LIGHT
- FLUORESCENT STRIP
- WALL MOUNTED FIXTURES
- ab — POLE MOUNTED SITE LIGHTING FIXTURE
  - FIXTURE TYPE (SEE LIGHT FIXTURE SCHEDULE)
- FLOOD LIGHT
- EXIT SIGN, CEILING MOUNTED. ARROW INDICATES EGRESS DIRECTION. SHADING INDICATES SIGN FACE. NUMERAL INDICATES BATTERY UNIT CONNECTED
- EXIT SIGN, WALL MOUNTED 7'-6" AFF OR 0'-6" ABOVE DOOR. SHADING INDICATES SIGN FACE. NUMERAL INDICATES BATTERY UNIT CONNECTED TO.
- BATT — DUAL HEAD EMERGENCY LIGHT BATTERY PACK WITH NUMBER OF HEADS AS INDICATED – WALL MOUNTED MTD 7'-6" AFF. NUMERAL INDICATES BATTERY ID NUMBER.
- TANDEM EMERGENCY LIGHT BATTERY PACK & EXIT SIGN – WALL MOUNTED MTD 7'-6" AFF OR 0,-6" ABOVE DOOR. NUMERAL INDICATES BATTERY ID NUMBER.
- REMOTE EMERGENCY LIGHTING HEAD – WALL MOUNTED MTD 7'-6" AFF. NUMERAL INDICATES BATTERY UNIT CONNECTED TO.
- S — SINGLE POLE TOGGLE SWITCH – MTD CL UP 4'-0" AFF
- S_2 — DOUBLE POLE TOGGLE SWITCH – MTD CL UP 4'-0" AFF
- S_3 — 3-WAY TOGGLE SWITCH – MTD CL UP 4'-0" AFF
- S_4 — 4-WAY TOGGLE SWITCH – MTD CL UP 4'-0" AFF
- S_M — WALL MOUNTED OCCUPANCY SENSOR – MTD CL UP 4'-0" AFF
- S_P — TOGGLE SWITCH WITH PILOT LIGHT – MTD CL UP 4'-0" AFF
- S_D — DIMMER SWITCH – MTD CL UP 4'-0" AFF
- S_{LV} — LOW VOLTAGE SWITCH – MTD CL UP 4'-0" AFF
- a — OCCUPANCY SENSOR a. INDICATES CONTROLLED FIXTURE
- PC — PHOTOCELL
- LC — LIGHTING CONTACTOR
- MS — MOTION SENSOR

FIRE ALARM DIAGRAM SYMBOLS

- FACP — FIRE ALARM CONTROL PANEL
- FAA — FIRE ALARM ANNUNCIATOR
- FCPS — FIELD CHARGER POWER SUPPLY
- M — FIRE ALARM MASTER BOX
- K — KNOX BOX
- F — FIRE ALARM MANUAL PULL STATION – WALL MTD CL UP 4'-0"
- H L — FIRE ALARM AUDIBLE/VISIBLE NOTIFICATION APPLIANCE CANDELA (CD) POWER PER NFPA 72 OR AS NOTED – WALL MTD BOTTOM UP 80" AFF. "H" HORN, "V" VOICE.
- L — FIRE ALARM VISUAL NOTIFICATION APPLIANCE CANDELA (CD) POWER PER NFPA 72 OR AS NOTED – WALL MTD BOTTOM UP 80" AFF
- CEILING MOUNTED SMOKE DETECTOR
- CEILING MOUNTED HEAT DETECTOR
- DUCT SMOKE DETECTOR S=SUPPLY, R=RETURN
- FS — SPRINKLER SYSTEM FLOW SWITCH
- TS — SPRINKLER SYSTEM TAMPER SWITCH
- PS — SPRINKLER SYSTEM PRESSURE SWITCH
- DH — FIRE ALARM SYSTEM MAGNETIC DOOR HOLDER
- FD — FIRE ALARM SYSTEM MAGNETIC DOOR HOLDER
- Z — MONITOR MODULE
- C — CONTROL MODULE
- R — RELAY MODULE

COMMUNICATIONS

- TEL — TELEPHONE BACKBOARD
- WX — PROVISIONS FOR TELEPHONE OUTLET. TWO-GANG WALL BOX WITH ONE 1"C STUB TO ABOVE ACCESSIBLE CEILING – MTD CL UP SAME AS ASSOCIATED RECEPTACLE
  - W-INDICATES WALL MOUNTED AT 60" AFF
  - P-INDICATES PAYPHONE MOUNTED AT 4'-0" AFF
  - X-INDCATES NUMBER OF JACKS, SINGLE BOX
- PROVISIONS FOR DATA OUTLET. TWO-GANG WALL BOX WITH ONE 1"C STUB TO ABOVE ACCESSIBLE CEILING – MTD CL UP SAME AS ASSOCIATED RECEPTACLE. SUBSCRIPTS AS NOTED ABOVE.
- 2D2T — PROVISIONS FOR TELEPHONE & DATA OUTLET. TWO-GANG WALL BOX WITH ONE 1"C STUB TO ABOVE ACCESSIBLE CEILING – MTD CL UP SAME AS ASSOCIATED RECEPTACLE. SUBSCRIPTS AS NOTED ABOVE.
- PROVISIONS FOR SCADA SYSTEM OUTLET. TWO-GANG WALL BOX WITH ONE 1"C STUB TO ABOVE ACCESSIBLE CEILING – MTD CL UP SAME AS ASSOCIATED RECEPTACLE
- CEILING MOUNTED TELEPHONE SYSTEM OUTLET
- CEILING MOUNTED DATA SYSTEM OUTLET
- CEILING MOUNTED VOICE & DATA OUTLET
- FLUSH TELEPHONE FLOOR OUTLET
- FLUSH DATA FLOOR OUTLET
- FLUSH VOICE & DATA FLOOR OUTLET
- TV — TELEVISION COAXIAL OUTLET. MOUNTED UP SAME AS ASSOCIATED RECEPTACLE

SECURITY

- SEC — SECURITY PANEL
- DS — DOOR INTRUSION SWITCH
- DE — ELECTRIC DOOR STRIKE
- CR — CARD READER
- KP — KEY PAD
- MOTION DETECTOR
- CAM — SECURITY CAMERA PTZ = PAN/TILT/ZOOM

INTERCOM & PAGING SYSTEM

- S — CEILING MOUNTED SPEAKER
- PA — PAGING SYSTEM CONTROL PANEL
- HS — PAGING SYSTEM HANDSET

INSTRUMENTATION

- LS / XX — FIELD MOUNTED INSTRUMENT
  - INSTRUMENT IDENTIFICATION TYPE
  - INSTRUMENT LOOP #
- FS / XX — VENDER SUPPLIED INSTRUMENT

INSTRUMENT IDENTIFIER:

AE	ANALYSIS ELEMENT
AIT	ANALYSIS INDICATING TRANSMITTER
AT	ANALYSIS TRANSMITTER
DPS	DIFFERENTIAL PRESSURE SWITCH
FCV	FLOW CONTROL VALVE
FE	FLOW ELEMENT
FIT	FLOW INDICATING TRANSMITTER
FT	FLOW TRANSMITTER
FS	FLOW SWITCH
FZ	FREEZE-STAT
LE	LEVEL ELEMENT
LIT	LEVEL INDICATING TRANSMITTER
LT	LEVEL TRANSMITTER
LS	LEVEL SWITCH
LSH	LEVEL SWITCH HIGH
LSL	LEVEL SWITCH LOW
MOV	MOTOR OPERATED VALVE
PE	PRESSURE ELEMENT
PIT	PRESSURE INDICATING TRANSMITTER
PT	PRESSURE TRANSMITTER
PS	PRESSURE SWITCH
SV	SOLENOID VALVE
TE	TEMPERATURE ELEMENT
TIT	TEMPERATURE INDICATING TRANSMITTER
TT	TEMPERATURE TRANSMITTER
ZS	PROXIMITY SWITCH

MISC TERMINALS

- ARROW, SMALL
- ARROW, LARGE
- ARROW, TRIANGULAR
- CONTINUE, SMALL
- CONTINUE, LARGE
- DOT, SMALL
- DOT, MEDIUM
- DOT, LARGE
- POLARITY SQUARE
- SCREW TERMINAL
- TERMINAL POINT, SMALL
- TERMINAL POINT, LARGE
- TERMINAL POINT, SQUARE
- SHIELD
- SHIELD W/TERMINAL POINT

ONE-LINE DIAGRAM SYMBOLS

- 52 GCB1 — HV VOLTAGE DRAWOUT TYPE POWER CIRCUIT BREAKER ELECTRICALLY OPERATED
- CB 800A E.O, 52 — MV VOLTAGE DRAWOUT TYPE POWER CIRCUIT BREAKER WITH MANUAL CONTROL SWITCH
- AT/AF, EO — LOW VOLTAGE CIRCUIT BREAKER
  - AF – AMP FRAME
  - AT – AMP TRIP
  - EO – ELECTRICALLY OPERATED
- ST — ST – SHUNT TRIP; GF – GROUND FAULT; EO – ELECTRICALLY OPERATED
- DISCONNECT, ISOLATION OR SAFETY SWITCH
- FUSED DISCONNECT SWITCH
- 1 — MAGNETIC MOTOR STARTER. NUMERAL INDICATES NEMA SIZE FVNR UNLESS OTHERWISE NOTED.
  - FVR – FULL VOLTAGE REVERSING
  - RVAT – REDUCING VOLTAGE AUTO TRANSFORMER
  - 2S – TWO SPEED
  - YD – WYE DELTA REDUCED VOLTAGE STARTER
- CAPACITOR
- VFD 11 — VFD = VARIABLE FREQUENCY DRIVE; SS = SOLID STATE STARTER; DC = DC VARIABLE DRIVE; NUMERAL INDICATES AMP RATING
- OA — POWER TRANSFORMER
  - OA – LIQUID TYPE SELF COOLED
  - AA – DRY TYPE SELF COOLED
  - FA – FAN COOLED
  - CONNECTION
- 2, 480/120 — POTENTIAL TRANSFORMER RATIO, NUMBER REQUIRED
- 2, 600/5 — CURRENT TRANSFORMER RATIO, PHASE
- 5 — MOTOR, NUMERAL INDICATES HORSEPOWER
- X — GENERAL LOAD, NUMERAL INDICATES LOAD IN KVA
- GENERATOR
- N E L ATS — ATS – AUTOMATIC TRANSFER SWITCH; MTS – MANUAL TRANSFER SWITCH
- A — METER
  - A – AMMETER
  - V – VOLTMETER
  - W – WATTMETER
  - KWH – KILOWATT HOUR
  - KVAR – KILOVAR METER
  - VAR – VAR METER
  - HZ – FREQUENCY METER
  - PF – POWER FACTOR METER
- 3 — LINE OR LOAD REACTOR NUMERAL INDICATES % IMPENDENCE
- DPM — DIGITAL POWER MONITOR
- AS — METER TRANSFER SWITCH; AS – AMMETER SWITCH; VS – VOLTMETER SWITCH
- SPD — SPD = SURGE PROTECTION DEVICE; ENDN = ETHERNET TO DEVICENET LINKING DEVICE; DPS = DEVICENET POWER SUPPLY
- MEDIUM VOLTAGE CABLE TERMINATION
- DRAWOUT DEVICE
- LA — LIGHTNING ARRESTOR
- K — KEY INTERLOCK

GROUNDING

- G — BARE COPPER GROUND CABLE. (SIZE 4/0 UNLESS OTHERWISE NOTED)
- 3/4ø X 10'-0" LONG GROUND ROD. (10'-0" MINIMUM LENGTH)
- EQUIPMENT BOLTED CONNECTION OR APPROVED EQUAL.
- CADWELL EXOTHERMIC CONNECTION
- PIGTAIL RISER UP THROUGH GRAVEL FOR CONNECTION TO EQUIPMENT. PROVIDE MINIMUM OF 12' AND COIL FOR CONNECTION AT A LATER DATE.
- GROUND

CONTROL DIAGRAM SYMBOLS

NOTE: ALL CONTROL SYMBOLS ARE DRAWN ASSUMING DE-ENERGIZED CIRCUITS, EMPTY TANKS, UNPRESSURIZED LINES, ETC.

OPEN ON INCREASE / CLOSE ON INCREASE:

- PRESSURE SWITCH
- LEVEL SWITCH
- FLOW SWITCH
- TEMPERATURE SWITCH

NORMALLY CLOSED / NORMALLY OPEN:

- PUSH BUTTON
- INSTANTANEOUS CONTACT
- TIMED CLOSE CONTACT
- TIMED OPEN CONTACT
- LIMIT SWITCH
- H O A, XOO, OOX — SELECTOR SWITCH: QUANTITY OF ARROWS INDICATES NUMBER OF POSITIONS. XOO INDICATES UPPER CONTACT CLOSED IN LEFT POSITION AND OPEN IN CENTER AND RIGHT POSITIONS
- INTERNAL WIRING
- FIELD WIRING
- RELAY COIL

ABBREVIATIONS

A,AMP	AMPERES
AC	ALTERNATING CURRENT
AFF	ABOVE FINISHED FLOOR
AFG	ABOVE FINISHED GRADE
AHJ	AUTHORITY HAVING JURISDICTION
AIC	AMPERE INTERRUPT CAPACITY
AWG	AMERICAN WIRE GAUGE
BFG	BELOW FINISHED GRADE
CATV	CABLE TELEVISION
CB	CIRCUIT BREAKER
CCTV	CLOSED CIRCUIT TELEVISION
CL	CENTER LINE
CKT	CIRCUIT
CP	CONTROL PANEL
CPT	CONTROL POWER TRANSFORMER
CT	CURRENT TRANSFORMER
CU	COPPER
E.C.	ELECTRICAL CONTRACTOR
EMT	ELECTRIC METALLIC TUBING
FAA	FIRE ALARM ANNUNCIATOR
FACP	FIRE ALARM CONTROL PANEL
FBO	FURNISHED BY OTHERS
FWE	FURNISHED WITH EQUIPMENT
G.C.	GENERAL CONTRACTOR
GEN	GENERATOR
GFCI	GROUND FAULT CIRCUIT INTERRUPTER
G,GND	GROUND
HP	HORSEPOWER
HZ	FREQUENCY IN CYCLES/SECOND
IG	ISOLATED GROUND
IMT	INTERMEDIATE METALLIC CONDUIT
JBOX	JUNCTION BOX
K	KILO
KCMIL	1000 CIRCULAR MILS
KVA	KILOVOLT AMPERE
KVAR	KILOVOLT AMPERE REACTIVE
KW	KILOWATT
KWH	KILOWATT HOUR
MCC	MOTOR CONTROL CENTER
MCB	MAIN CIRCUIT BREAKER
MFG	MANUFACTURER
MH	MANHOLE
MLO	MAIN LUGS ONLY
MTD	MOUNTED
MTR	MOTOR
MV	MEDIUM VOLTAGE
NC	NORMALLY CLOSED
NEC	NATIONAL ELECTRIC CODE
NEUT	NEUTRAL
NO	NORMALLY OPEN
OL	OVERLOAD ELEMENT
PF	POWER FACTOR
PH	PHASE
PRI	PRIMARY
PT	POTENTIAL TRANSFORMER
PVC	POLYVINYL CHLORIDE
RGS	RIGID STEEL CONDUIT
RTD	RESISTANCE TEMPERATURE DETECTOR
SEC	SECONDARY
SS	STAINLESS STEEL
SV	SOLENOID VALVE
TEMP	TEMPERATURE
TVSS	TRANSIENT VOLTAGE SURGE SUPPRESSOR
TYP	TYPICAL
UE	UNDERGROUND ELECTRIC
UG	UNDERGROUND
UPS	UNINTERRUPTED POWER SUPPLY
V	VOLTS
VA	VOLT-AMPERES
VAR	VOLT-AMPERE REACTIVE
W	WATT
WM	WATT METER
WP	WEATHER PROOF
XFMR	TRANSFORMER
XP	EXPLOSION PROOF

WOODARD & CURRAN
980 Washington Street, Suite 325
Dedham, Massachusetts 02026
800.446.5518 | www.woodardcurran.com

COMMITMENT & INTEGRITY DRIVE RESULTS

THIS DOCUMENT IS THE PROPERTY OF WOODARD & CURRAN INC. AND ITS CLIENT. REPRODUCTION OR MODIFICATION WITHOUT WRITTEN PERMISSION IS PROHIBITED.

COMMONWEALTH OF MASSACHUSETTS
ANDREW FITZPATRICK ELECTRICAL NO. 50761
REGISTERED PROFESSIONAL ENGINEER

REV	DESCRIPTION	DATE

DESIGNED BY: GW
DRAWN BY: PO
CHECKED BY: AJF
229123-E-001.dwg

ELECTRICAL LEGEND

DEPARTMENT OF PUBLIC WORKS
NANTUCKET, MASSACHUSETTS

SURFSIDE WASTEWATER TREATMENT FACILITY UPGRADES

JOB NO.: 229123.00
DATE: SEPTEMBER 2016
SCALE: AS NOTED
SHEET: 78 OF 116

E-001

ISSUED FOR BID

\\woodardcurran.net\shared\Projects\229123 Nantucket MA Surfside WWTF Upgrades 2015-2016\wip\Drawings\Electrical\229123-E-001.dwg, Sep 20, 2016 - 3:38pm

22x34 SHEET
1:1

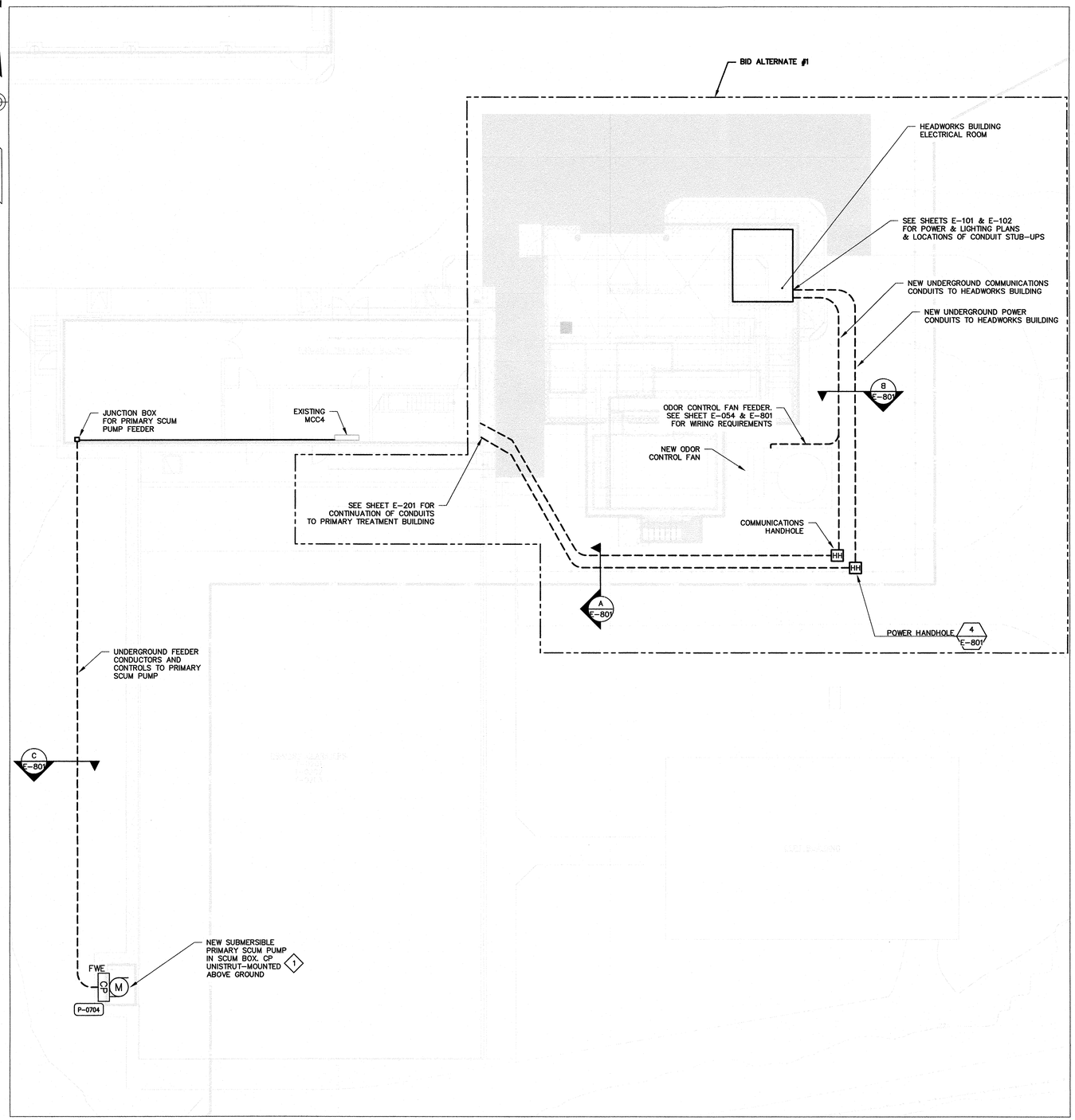

HEADWORKS & PRIMARY TREATMENT BUILDING PART PLAN

SCALE: 1" = 10'

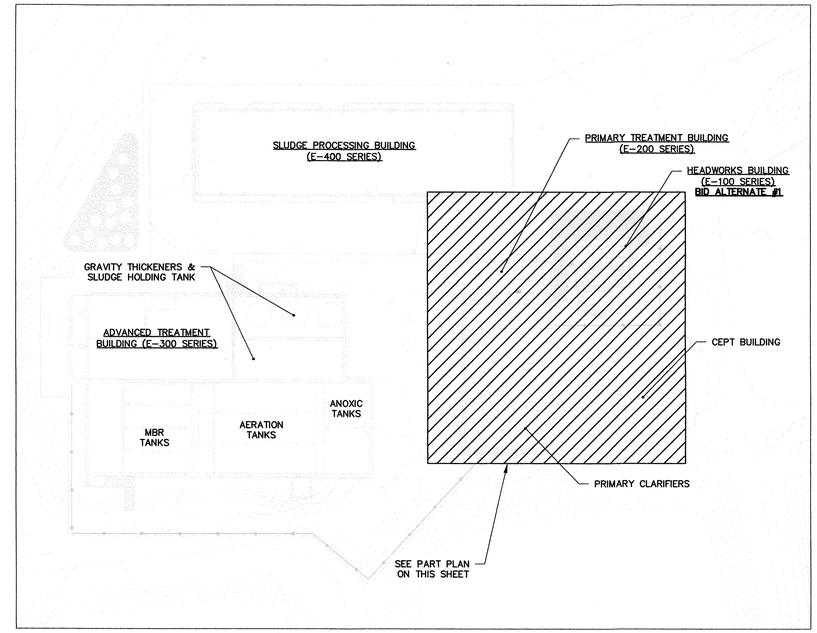

OVERALL SITE PLAN

SCALE: 1" = 50'

50' 0 50' 100'
BAR SCALE
1" = 50'
CHECK GRAPHIC SCALE BEFORE USING

GENERAL NOTES:

1. REFERENCE INSTRUMENTATION & CONTROLS RISER DIAGRAM ON SHEET E-601 FOR COMMUNICATIONS CABLING REQUIREMENTS.

KEYED NOTES:

1. PRIMARY SCUM PUMP FED FROM MCC4. SEE SHEET E-051 FOR WIRING REQUIREMENTS PROVIDE CONDUIT SEALS AS REQUIRED.

10' 0 10' 20'
BAR SCALE
1" = 10'
CHECK GRAPHIC SCALE BEFORE USING

ISSUED FOR BID

980 Washington Street, Suite 325
Dedham, Massachusetts 02026
800.446.5518 | www.woodardcurran.com
WOODARD & CURRAN
COMMITMENT & INTEGRITY DRIVE RESULTS

THIS DOCUMENT IS THE PROPERTY OF WOODARD & CURRAN INC. AND ITS CLIENT. REPRODUCTION OR MODIFICATION WITHOUT WRITTEN PERMISSION IS PROHIBITED.

COMMONWEALTH OF MASSACHUSETTS
ANDREW FITZPATRICK ELECTRICAL NO. 50751
REGISTERED PROFESSIONAL ENGINEER
2016-09-21

REV	DESCRIPTION	DATE

DESIGNED BY: GW
DRAWN BY: PO
CHECKED BY: AJF
229123-E-002.dwg

HEADWORKS & PRIMARY TREATMENT BUILDING PART PLAN/OVERALL SITE PLAN

DEPARTMENT OF PUBLIC WORKS
NANTUCKET, MASSACHUSETTS

SURFSIDE WASTEWATER TREATMENT FACILITY UPGRADES

JOB NO.: 229123.00
DATE: SEPTEMBER 2016
SCALE: AS NTOED
SHEET: 79 OF 116

E-002

\\woodardcurran.net\shared\Projects\229123 Nantucket MA Surfside WWTF Upgrddes 2015-2016\wip\Drawings\Electrical\229123-E-002.dwg, Sep 20, 2016 - 3:19pm

22x34 SHEET
1:1

DEMOLITION NOTES:

1. THE INTENT OF THE DEMOLITION PLANS IS TO DOCUMENT EXISTING CONDITIONS. HOWEVER, ALL ELECTRICAL EQUIPMENT MAY NOT NECESSARILY BE INDICATED ON THE DRAWINGS. FIELD VERIFY AND ADJUST WORK TO SUIT ALL CONDITIONS FOUND.
2. ITEMS SHOWN WITH BOLD DESIGNATION INDICATE EXISTING ITEMS TO BE REMOVED. ALL ITEMS SHOWN WITH LIGHT DESIGNATION INDICATE EXISTING ITEMS TO REMAIN, UNLESS SPECIFICALLY INDICATED OTHERWISE. ALL ITEMS INDICATED FOR REMOVAL SHALL BE REMOVED WITH ALL ASSOCIATED HARDWARE AND ACCESSORIES COMPLETE BACK TO SOURCE INCLUDING, BUT NOT LIMITED TO: CONDUIT, BOXES, WIRING, CABLES, HANGERS, ETC.
3. IN ALL LOCATIONS WHERE EQUIPMENT AND WIRING IS TO REMAIN, BUT CANNOT BE DISCONNECTED WITHOUT DAMAGING, PROVIDE NEW EQUIPMENT AND HARDWARE AS REQUIRED, TO ENSURE PROPER OPERATIONS.
4. IN ALL SURROUNDING AREAS THAT ARE NOT BEING RENOVATED UNDER THIS CONTRACT, VERIFY THAT ELECTRICAL POWER, LIGHTING, AND SYSTEMS HAVE NOT BEEN AFFECTED BY THE ALTERATIONS. IN LOCATIONS WHERE SYSTEMS ARE AFFECTED, PROVIDE ALL WORK AS REQUIRED TO MAINTAIN PROPER OPERATIONS OF THESE SYSTEMS.
5. THE CONTRACTOR SHALL ARRANGE TO EXECUTE ALL WORK AT SUCH TIMES AND IN SUCH LOCATIONS TO PROVIDE UNINTERRUPTED SERVICES FOR THE BUILDING, OR ANY OF ITS SECTIONS. IF NECESSARY, TEMPORARY WORK SHALL BE INSTALLED TO PROVIDE FOR THIS CONDITION. THE INTENT IS FOR ALL NEW EQUIPMENT TO BE INSTALLED AND READY TO BE ENERGIZED PRIOR TO REMOVAL OF EXISTING EQUIPMENT TO MINIMIZE DOWNTIME TO THE GREATEST EXTENT POSSIBLE. AUTHORIZATION FOR INTERRUPTING SERVICES SHALL BE OBTAINED IN WRITING FROM THE OWNER.

KEYED NOTES:

1. DISCONNECT AND REMOVE ALL WIRING ASSOCIATED WITH PRIMARY SLUDGE PUMPS IN PREPARATION FOR NEW. EXISTING CIRCUIT BREAKER/MOTOR STARTER BUCKETS AND CONDUITS TO REMAIN FOR RE-USE.
2. DISCONNECT AND REMOVE EXISTING CIRCUIT BREAKER/MOTOR STARTER BUCKET AND ALL ASSOCIATED ELECTRICAL IN PREPARATION FOR NEW PRIMARY SCUM PUMP CIRCUIT BREAKER BUCKET.
3. DISCONNECT AND REMOVE EXISTING WIRING ASSOCIATED WITH GRIT SCREW CONVEYOR. GRIT SCREW MOTOR AND DRIVE TO REMAIN FOR RECONNECTION. SEE SHEET E-054 FOR NEW WIRING REQUIREMENTS.
4. REMOVE EXISTING BLANK SPACE PLATES ON MCC4 IN PREPARATION FOR FEEDER CIRCUIT BREAKER TO NEW HEADWORKS DISTRIBUTION PANEL 'PPHW'.
5. DISCONNECT AND REMOVE EXISTING CONTROL PANELS AND WIRING ASSOCIATED WITH PRIMARY SLUDGE PUMP GRINDERS IN PREPARATION FOR NEW. EXISTING WIRING FROM BREAKER TO CONTROL PANELS TO REMAIN FOR RECONNECTION. SEE SHEET E-051 FOR NEW POWER WIRING REQUIREMENTS AND E-601 FOR CONTROL WIRING RECONNECTION.
6. DISCONNECT AND REMOVE ALL EXISTING WIRING AND APPURTENANCES ASSOCIATED WITH DUPERON CONTROL PANEL AND WASH SCREEN SYSTEM PUMPS IN PREPARATION FOR NEW. RELOCATE DUPERON CONTROL PANEL TO HEADWORKS BUILDING ELECTRICAL ROOM. SEE SHEET E-101 FOR NEW LOCATION AND E-054 FOR NEW WIRING REQUIREMENTS.

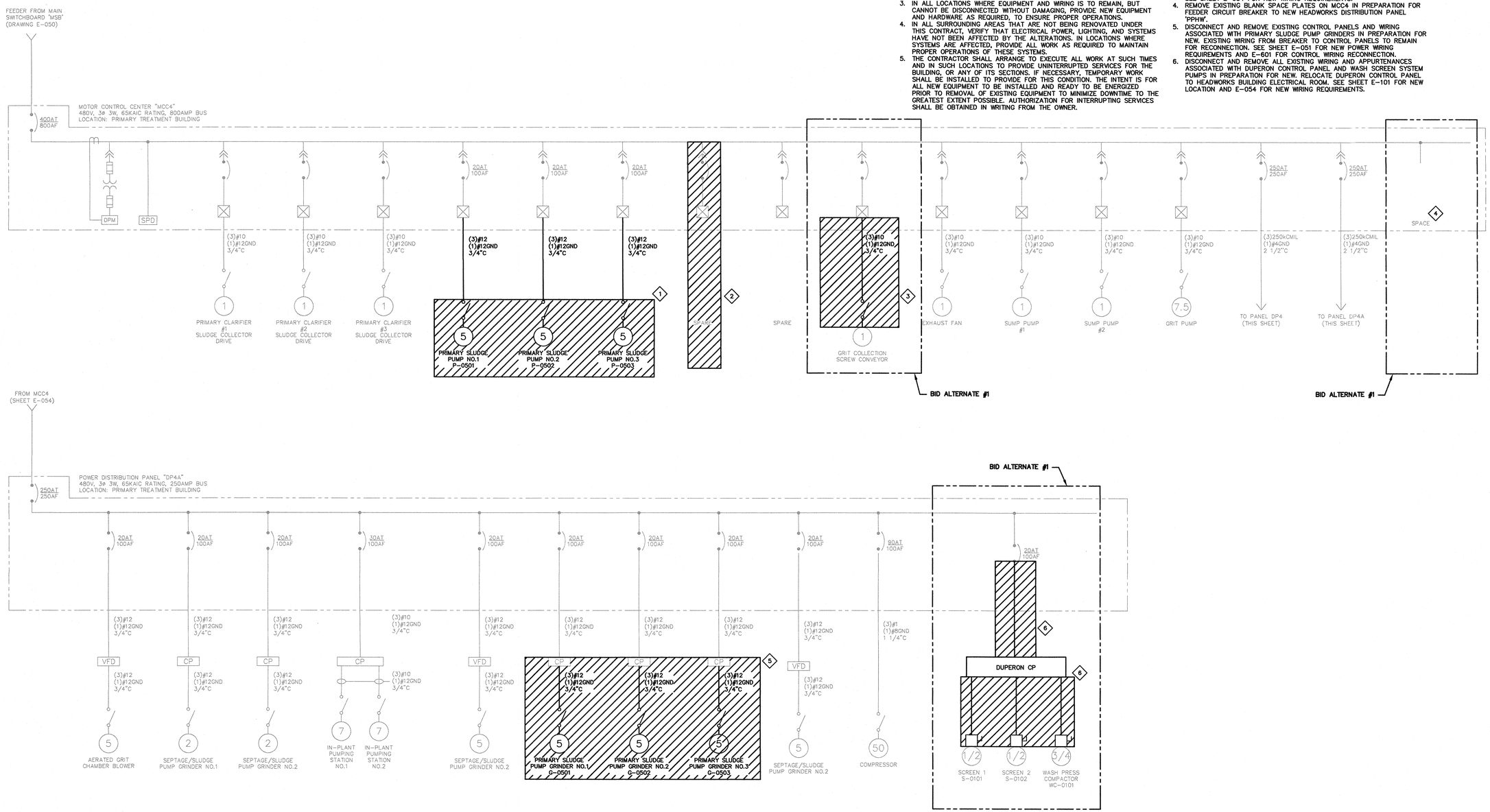

ISSUED FOR BID

980 Washington Street, Suite 325
Dedham, Massachusetts 02026
800.446.5518 | www.woodardcurran.com

WOODARD & CURRAN

COMMITMENT & INTEGRITY DRIVE RESULTS

THIS DOCUMENT IS THE PROPERTY OF WOODARD & CURRAN INC., AND ITS CLIENT. REPRODUCTION OR MODIFICATION WITHOUT WRITTEN PERMISSION IS PROHIBITED.

COMMONWEALTH OF MASSACHUSETTS
ANDREW FITZPATRICK
ELECTRICAL
NO. 50751
REGISTERED PROFESSIONAL ENGINEER
2-12-16

REV	DESCRIPTION	DATE

DESIGNED BY: GW
DRAWN BY: PO
CHECKED BY: AJF

PRIMARY TREATMENT BUILDING MCC4 & DP4A DEMOLITION ONE-LINE DIAGRAMS

DEPARTMENT OF PUBLIC WORKS
NANTUCKET, MASSACHUSETTS

SURFSIDE WASTEWATER TREATMENT FACILITY UPGRADES

JOB NO.: 229123.00
DATE: SEPTEMBER 2016
SCALE: AS NOTED
SHEET: 80 OF 116

ED-051

22x34 SHEET
1:1

DEMOLITION NOTES:

1. THE INTENT OF THE DEMOLITION PLANS IS TO DOCUMENT EXISTING CONDITIONS. HOWEVER, ALL ELECTRICAL EQUIPMENT MAY NOT NECESSARILY BE INDICATED ON THE DRAWINGS. FIELD VERIFY AND ADJUST WORK TO SUIT ALL CONDITIONS FOUND.
2. ITEMS SHOWN WITH BOLD DESIGNATION INDICATE EXISTING ITEMS TO BE REMOVED. ALL ITEMS SHOWN WITH LIGHT DESIGNATION INDICATE EXISTING ITEMS TO REMAIN, UNLESS SPECIFICALLY INDICATED OTHERWISE. ALL ITEMS INDICATED FOR REMOVAL SHALL BE REMOVED WITH ALL ASSOCIATED HARDWARE AND ACCESSORIES COMPLETE BACK TO SOURCE INCLUDING, BUT NOT LIMITED TO: CONDUIT, BOXES, WIRING, CABLES, HANGERS, ETC.
3. IN ALL LOCATIONS WHERE EQUIPMENT AND WIRING IS TO REMAIN, BUT CANNOT BE DISCONNECTED WITHOUT DAMAGING, PROVIDE NEW EQUIPMENT AND HARDWARE AS REQUIRED, TO ENSURE PROPER OPERATIONS.
4. IN ALL SURROUNDING AREAS THAT ARE NOT BEING RENOVATED UNDER THIS CONTRACT, VERIFY THAT ELECTRICAL POWER, LIGHTING, AND SYSTEMS HAVE NOT BEEN AFFECTED BY THE ALTERATIONS. IN LOCATIONS WHERE SYSTEMS ARE AFFECTED, PROVIDE ALL WORK AS REQUIRED TO MAINTAIN PROPER OPERATIONS OF THESE SYSTEMS.
5. THE CONTRACTOR SHALL ARRANGE TO EXECUTE ALL WORK AT SUCH TIMES AND IN SUCH LOCATIONS TO PROVIDE UNINTERRUPTED SERVICES FOR THE BUILDING, OR ANY OF ITS SECTIONS. IF NECESSARY, TEMPORARY WORK SHALL BE INSTALLED TO PROVIDE FOR THIS CONDITION. THE INTENT IS FOR ALL NEW EQUIPMENT TO BE INSTALLED AND READY TO BE ENERGIZED PRIOR TO REMOVAL OF EXISTING EQUIPMENT TO MINIMIZE DOWNTIME TO THE GREATEST EXTENT POSSIBLE. AUTHORIZATION FOR INTERRUPTING SERVICES SHALL BE OBTAINED IN WRITING FROM THE OWNER.

KEYED NOTES:

1. DISCONNECT AND REMOVE EXISTING CIRCUIT BREAKER AND ALL ELECTRICAL ASSOCIATED WITH AERATION LIFT PUMPS IN PREPARATION FOR NEW.
2. DISCONNECT AND REMOVE EXISTING CIRCUIT BREAKER/MOTOR STARTER BUCKET, WIRING AND DISCONNECTS ASSOCIATED WITH PRE-ANOXIC MIXERS #1 & #2 IN PREPARATION FOR NEW. EXISTING CONDUITS TO REMAIN FOR RE-USE.
3. DISCONNECT AND REMOVE EXISTING CIRCUIT BREAKER/MOTOR STARTER BUCKET AND ALL ELECTRICAL ASSOCIATED WITH PRE-ANOXIC MIXERS #3 & #4.

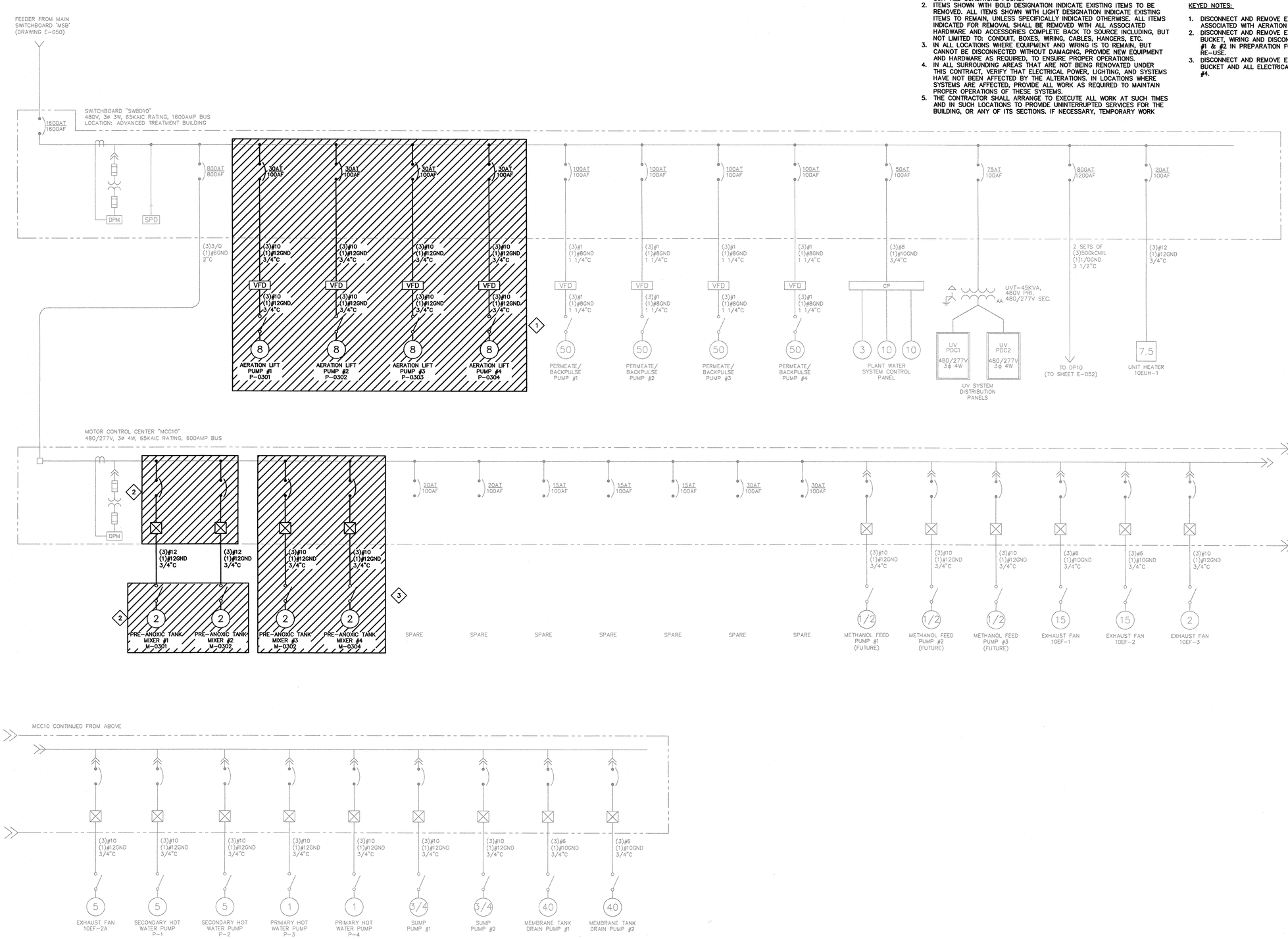

ISSUED FOR BID

980 Washington Street, Suite 325
Dedham, Massachusetts 02026
800.446.5518 | www.woodardcurran.com

COMMITMENT & INTEGRITY DRIVE RESULTS

WOODARD & CURRAN

THIS DOCUMENT IS THE PROPERTY OF WOODARD & CURRAN INC. AND ITS CLIENT. REPRODUCTION OR MODIFICATION WITHOUT WRITTEN PERMISSION IS PROHIBITED.

COMMONWEALTH OF MASSACHUSETTS
ANDREW FITZPATRICK ELECTRICAL NO. 30761
REGISTERED PROFESSIONAL ENGINEER
2-23-23

REV	DESCRIPTION	DATE

DESIGNED BY: GW
DRAWN BY: PO
CHECKED BY: AJF

ADVANCED TREATMENT BUILDING SWBD & MCC10 DEMOLITION ONE-LINE DIAGRAMS

DEPARTMENT OF PUBLIC WORKS
NANTUCKET, MASSACHUSETTS

SURFSIDE WASTEWATER TREATMENT FACILITY UPGRADES

JOB NO.: 229123.00
DATE: SEPTEMBER 2016
SCALE: AS NOTED
SHEET: 81 OF 116

ED-052

22x34 SHEET
1:1

DEMOLITION NOTES:

1. THE INTENT OF THE DEMOLITION PLANS IS TO DOCUMENT EXISTING CONDITIONS. HOWEVER, ALL ELECTRICAL EQUIPMENT MAY NOT NECESSARILY BE INDICATED ON THE DRAWINGS. FIELD VERIFY AND ADJUST WORK TO SUIT ALL CONDITIONS FOUND.
2. ITEMS SHOWN WITH BOLD DESIGNATION INDICATE EXISTING ITEMS TO BE REMOVED. ALL ITEMS SHOWN WITH LIGHT DESIGNATION INDICATE EXISTING ITEMS TO REMAIN, UNLESS SPECIFICALLY INDICATED OTHERWISE. ALL ITEMS INDICATED FOR REMOVAL SHALL BE REMOVED WITH ALL ASSOCIATED HARDWARE AND ACCESSORIES COMPLETE BACK TO SOURCE INCLUDING, BUT NOT LIMITED TO: CONDUIT, BOXES, WIRING, CABLES, HANGERS, ETC.
3. IN ALL LOCATIONS WHERE EQUIPMENT AND WIRING IS TO REMAIN, BUT CANNOT BE DISCONNECTED WITHOUT DAMAGING, PROVIDE NEW EQUIPMENT AND HARDWARE AS REQUIRED, TO ENSURE PROPER OPERATIONS.
4. IN ALL SURROUNDING AREAS THAT ARE NOT BEING RENOVATED UNDER THIS CONTRACT, VERIFY THAT ELECTRICAL POWER, LIGHTING, AND SYSTEMS HAVE NOT BEEN AFFECTED BY THE ALTERATIONS. IN LOCATIONS WHERE SYSTEMS ARE AFFECTED, PROVIDE ALL WORK AS REQUIRED TO MAINTAIN PROPER OPERATIONS OF THESE SYSTEMS.
5. THE CONTRACTOR SHALL ARRANGE TO EXECUTE ALL WORK AT SUCH TIMES AND IN SUCH LOCATIONS TO PROVIDE UNINTERRUPTED SERVICES FOR THE BUILDING, OR ANY OF ITS SECTIONS. IF NECESSARY, TEMPORARY WORK SHALL BE INSTALLED TO PROVIDE FOR THIS CONDITION. THE INTENT IS FOR ALL NEW EQUIPMENT TO BE INSTALLED AND READY TO BE ENERGIZED PRIOR TO REMOVAL OF EXISTING EQUIPMENT TO MINIMIZE DOWNTIME TO THE GREATEST EXTENT POSSIBLE. AUTHORIZATION FOR INTERRUPTING SERVICES SHALL BE OBTAINED IN WRITING FROM THE OWNER.

KEYED NOTES:

1. DISCONNECT AND REMOVE FEEDER CIRCUIT BREAKER AND ALL ELECTRICAL ASSOCIATED WITH RAS PUMPS.

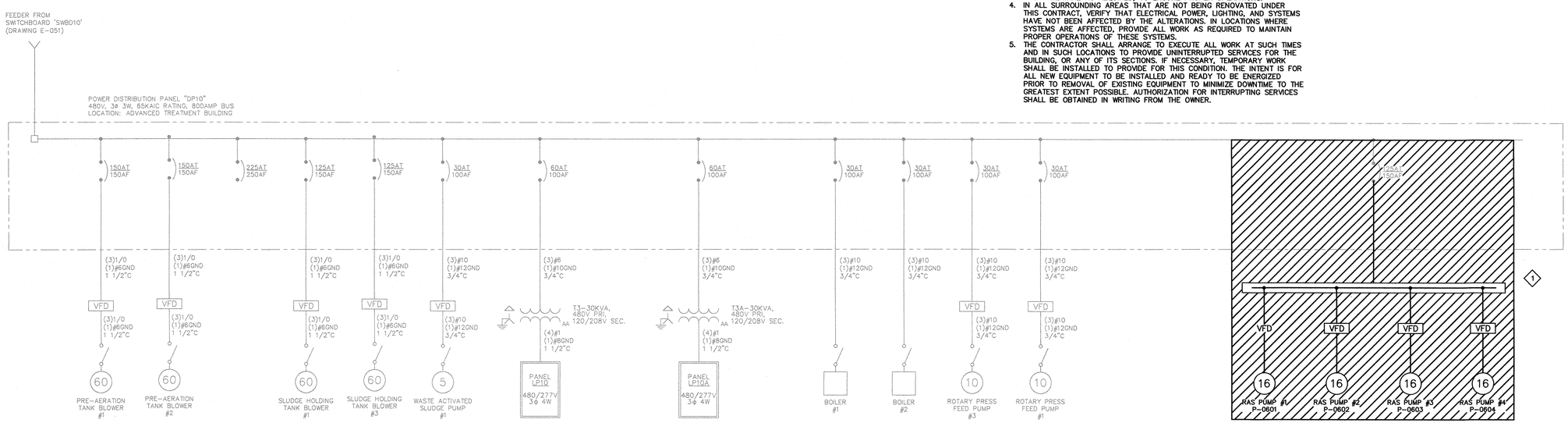

ISSUED FOR BID

980 Washington Street, Suite 325
Dedham, Massachusetts 02026
800.446.5518 | www.woodardcurran.com
WOODARD & CURRAN
COMMITMENT & INTEGRITY DRIVE RESULTS

THIS DOCUMENT IS THE PROPERTY OF WOODARD & CURRAN INC. AND ITS CLIENT. REPRODUCTION OR MODIFICATION WITHOUT WRITTEN PERMISSION IS PROHIBITED.

COMMONWEALTH OF MASSACHUSETTS
ANDREW FITZPATRICK ELECTRICAL
No. 47811
REGISTERED PROFESSIONAL ENGINEER
23-09-2016

REV	DESCRIPTION	DATE

DESIGNED BY: GW
DRAWN BY: PO
CHECKED BY: AJF

ADVANCED TREATMENT BUILDING DP10 & DP10B
ONE-LINE DIAGRAMS

DEPARTMENT OF PUBLIC WORKS
NANTUCKET, MASSACHUSETTS

SURFSIDE WASTEWATER
TREATMENT FACILITY
UPGRADES

JOB NO.: 229123.00
DATE: SEPTEMBER 2016
SCALE: AS NOTED
SHEET: 82 OF 116

ED-053

22x34 SHEET
1:1

DEMOLITION NOTES:

1. THE INTENT OF THE DEMOLITION PLANS IS TO DOCUMENT EXISTING CONDITIONS. HOWEVER, ALL ELECTRICAL EQUIPMENT MAY NOT NECESSARILY BE INDICATED ON THE DRAWINGS. FIELD VERIFY AND ADJUST WORK TO SUIT ALL CONDITIONS FOUND.
2. ITEMS SHOWN WITH BOLD DESIGNATION INDICATE EXISTING ITEMS TO BE REMOVED. ALL ITEMS SHOWN WITH LIGHT DESIGNATION INDICATE EXISTING ITEMS TO REMAIN, UNLESS SPECIFICALLY INDICATED OTHERWISE. ALL ITEMS INDICATED FOR REMOVAL SHALL BE REMOVED WITH ALL ASSOCIATED HARDWARE AND ACCESSORIES COMPLETE BACK TO SOURCE INCLUDING, BUT NOT LIMITED TO: CONDUIT, BOXES, WIRING, CABLES, HANGERS, ETC.
3. IN ALL LOCATIONS WHERE EQUIPMENT AND WIRING IS TO REMAIN, BUT CANNOT BE DISCONNECTED WITHOUT DAMAGING, PROVIDE NEW EQUIPMENT AND HARDWARE AS REQUIRED, TO ENSURE PROPER OPERATIONS.
4. IN ALL SURROUNDING AREAS THAT ARE NOT BEING RENOVATED UNDER THIS CONTRACT, VERIFY THAT ELECTRICAL POWER, LIGHTING, AND SYSTEMS HAVE NOT BEEN AFFECTED BY THE ALTERATIONS. IN LOCATIONS WHERE SYSTEMS ARE AFFECTED, PROVIDE ALL WORK AS REQUIRED TO MAINTAIN PROPER OPERATIONS OF THESE SYSTEMS.
5. THE CONTRACTOR SHALL ARRANGE TO EXECUTE ALL WORK AT SUCH TIMES AND IN SUCH LOCATIONS TO PROVIDE UNINTERRUPTED SERVICES FOR THE BUILDING, OR ANY OF ITS SECTIONS. IF NECESSARY, TEMPORARY WORK SHALL BE INSTALLED TO PROVIDE FOR THIS CONDITION. THE INTENT IS FOR ALL NEW EQUIPMENT TO BE INSTALLED AND READY TO BE ENERGIZED PRIOR TO REMOVAL OF EXISTING EQUIPMENT TO MINIMIZE DOWNTIME TO THE GREATEST EXTENT POSSIBLE. AUTHORIZATION FOR INTERRUPTING SERVICES SHALL BE OBTAINED IN WRITING FROM THE OWNER.

KEYED NOTES:

1. DISCONNECT AND REMOVE ALL CONDUIT AND WIRING ASSOCIATED WITH POLYMER FEED SYSTEM CONTROL PANELS. EXISTING CIRCUIT BREAKERS TO REMAIN AS SPARES.
2. DISCONNECT AND REMOVE ALL CONDUIT AND WIRING ASSOCIATED WITH POLYMER FEED SYSTEM. EXISTING CIRCUIT BREAKER TO REMAIN AS SPARE.

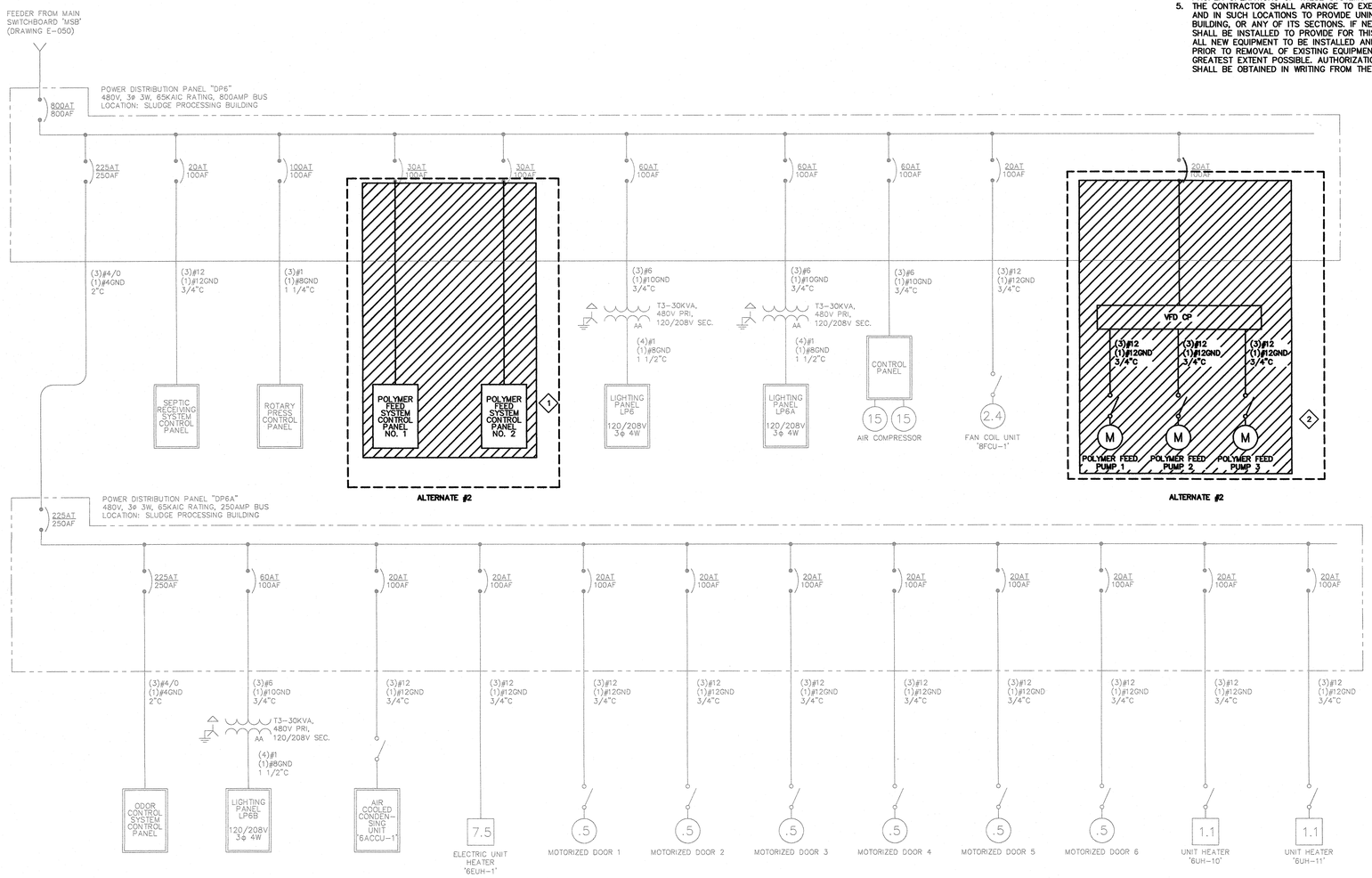

ISSUED FOR BID

980 Washington Street, Suite 325
Dedham, Massachusetts 02026
800.446.5518 | www.woodardcurran.com
WOODARD & CURRAN
COMMITMENT & INTEGRITY DRIVE RESULTS

THIS DOCUMENT IS THE PROPERTY OF WOODARD & CURRAN INC. AND ITS CLIENT. REPRODUCTION OR MODIFICATION WITHOUT WRITTEN PERMISSION IS PROHIBITED.

COMMONWEALTH OF MASSACHUSETTS
ANDREW FITZPATRICK ELECTRICAL NO. 50751
REGISTERED PROFESSIONAL ENGINEER
2-16-23

REV	DESCRIPTION	DATE

DESIGNED BY: GW
DRAWN BY: PO
CHECKED BY: AJF

SOLIDS PROCESSING BUILDING DP6 DEMOLITION ONE-LINE DIAGRAM

DEPARTMENT OF PUBLIC WORKS NANTUCKET, MASSACHUSETTS

SURFSIDE WASTEWATER TREATMENT FACILITY UPGRADES

JOB NO.: 229123.00
DATE: SEPTEMBER 2016
SCALE: AS NOTED
SHEET: 83 OF 116

ED-054

22x34 SHEET
1:1

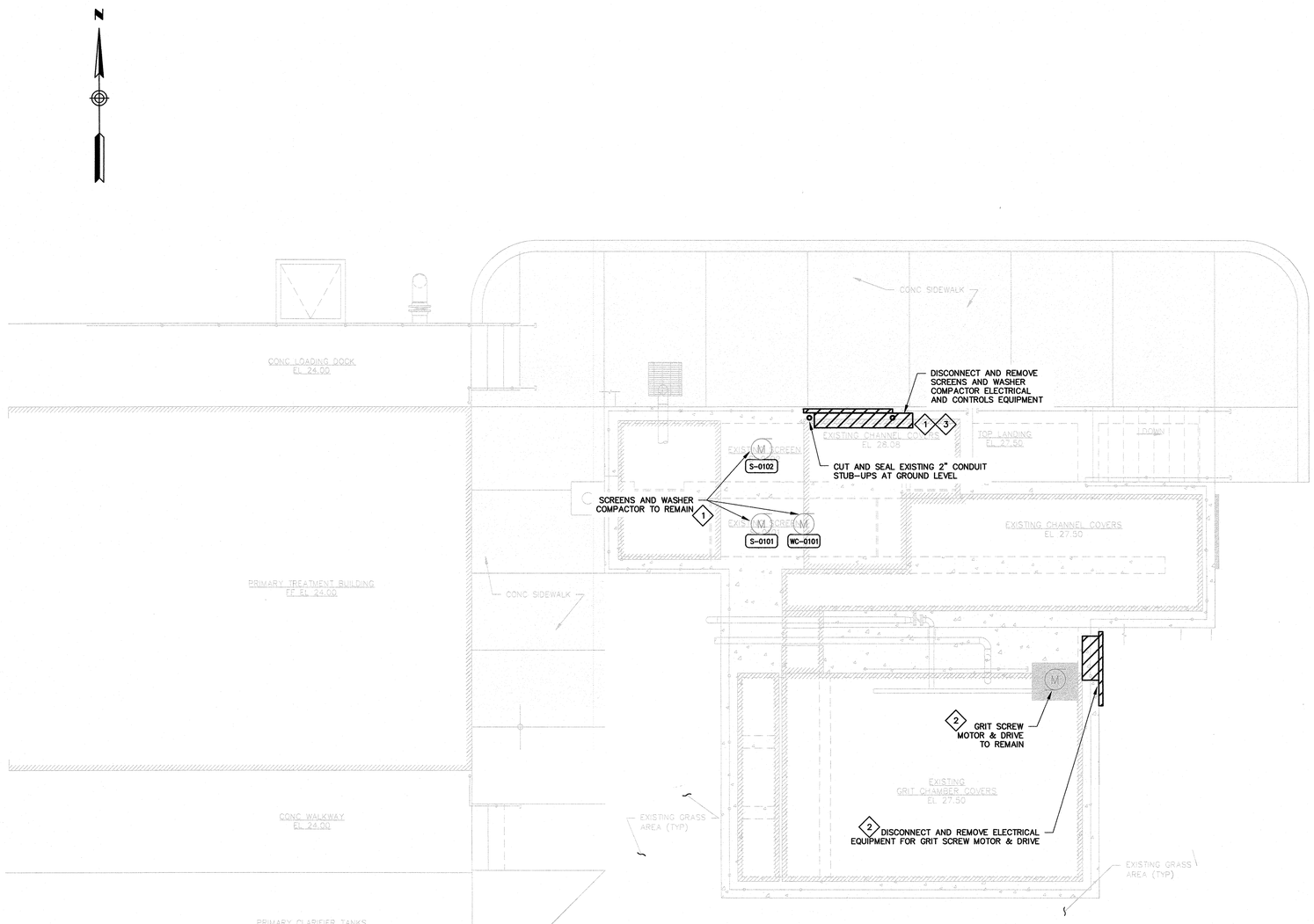

HEADWORKS BUILDING ELECTRICAL DEMOLITION PLAN

SCALE: 3/8" = 1'-0"

DEMOLITION NOTES:

1. THE INTENT OF THE DEMOLITION PLANS IS TO DOCUMENT EXISTING CONDITIONS. HOWEVER, ALL ELECTRICAL EQUIPMENT MAY NOT NECESSARILY BE INDICATED ON THE DRAWINGS. FIELD-VERIFY AND ADJUST WORK TO SUIT ALL CONDITIONS FOUND.
2. ITEMS SHOWN WITH BOLD DESIGNATION INDICATE EXISTING ITEMS TO BE REMOVED. ALL ITEMS SHOWN WITH LIGHT DESIGNATION INDICATE EXISTING ITEMS TO REMAIN, UNLESS SPECIFICALLY INDICATED OTHERWISE. ALL ITEMS INDICATED FOR REMOVAL SHALL BE REMOVED WITH ALL ASSOCIATED HARDWARE AND ACCESSORIES COMPLETE BACK TO SOURCE INCLUDING, BUT NOT LIMITED TO: CONDUIT, BOXES, WIRING, CABLES, HANGERS, ETC.
3. IN ALL LOCATIONS WHERE EQUIPMENT AND WIRING IS TO REMAIN, BUT CANNOT BE DISCONNECTED WITHOUT DAMAGING, PROVIDE NEW EQUIPMENT AND HARDWARE AS REQUIRED, TO ENSURE PROPER OPERATIONS.
4. IN ALL SURROUNDING AREAS THAT ARE NOT BEING RENOVATED UNDER THIS CONTRACT, VERIFY THAT ELECTRICAL POWER, LIGHTING, AND SYSTEMS HAVE NOT BEEN AFFECTED BY THE ALTERATIONS. IN LOCATIONS WHERE SYSTEMS ARE AFFECTED, PROVIDE ALL WORK AS REQUIRED TO MAINTAIN PROPER OPERATIONS OF THESE SYSTEMS.
5. THE CONTRACTOR SHALL ARRANGE TO EXECUTE ALL WORK AT SUCH TIMES AND IN SUCH LOCATIONS TO PROVIDE UNINTERRUPTED SERVICES FOR THE BUILDING, OR ANY OF ITS SECTIONS. IF NECESSARY, TEMPORARY WORK SHALL BE INSTALLED TO PROVIDE FOR THIS CONDITION. THE INTENT IS FOR ALL NEW EQUIPMENT TO BE INSTALLED AND READY TO BE ENERGIZED PRIOR TO REMOVAL OF EXISTING EQUIPMENT TO MINIMIZE DOWNTIME TO THE GREATEST EXTENT POSSIBLE. AUTHORIZATION FOR INTERRUPTING SERVICES SHALL BE OBTAINED IN WRITING FROM THE OWNER.

KEYED NOTES:

1. DISCONNECT AND REMOVE SCREENS AND WASHER COMPACTOR CONTROL JUNCTION BOX, SIGNAL JUNCTION BOX, START/STOP STATION, LOCAL LIGHTING AND FLOW TRANSMITTER FIT-0110 AND ALL ASSOCIATED APPURTENANCES. DISCONNECT AND REMOVE THE SCREENS AND WASHER COMPACTOR FEEDER BACK TO THE DUPERON CONTROL PANEL LOCATED IN THE PRIMARY TREATMENT BUILDING AND ALL ASSOCIATED CONTROL WIRING BACK TO SOURCE. CUT ALL CONDUITS FLUSH WITH FLOOR AND COMPLETELY SEAL. EXISTING UNISTRUT SUPPORTS TO REMAIN AND BE MODIFIED TO ACCOMODATE MOUNTING NEW EQUIPMENT. SCREENS AND WASHER COMPACTOR TO REMAIN FOR RECONNECTION, SEE SHEET E-054 FOR NEW WIRING REQUIREMENTS AND E-101 FOR NEW POWER PLAN.
2. DISCONNECT AND REMOVE GRIT SCREW START/STOP STATION, DISCONNECT SWITCH AND ALL ASSOCIATED APPURTENANCES. DISCONNECT AND REMOVE THE FEEDER BACK TO MCC4 AND ALL ASSOCIATED CONTROL WIRING BACK TO SOURCE. CUT ALL CONDUITS FLUSH WITH FLOOR AND COMPLETELY SEAL. GRIT SCREW TO REMAIN FOR RECONNECTION. SEE SHEET E-054 FOR GRIT SCREW WIRING REQUIREMENTS.
3. DISCONNECT AND REMOVE EXISTING GROUND CONDUCTORS ON ALL INTERIOR STEEL STRUCTURES LOCATED AT HEADWORKS. REFER TO DIVISION 26 SPECIFICATIONS FOR NEW LIGHTNING PROTECTION SYSTEM.

NOTE:

ALL WORK ON THIS SHEET IS PART OF BID ALTERNATE #1.

4' 3' 2' 1' 0 3' 6'

BAR SCALE
3/8" = 1'-0"
CHECK GRAPHIC SCALE BEFORE USING

ISSUED FOR BID

980 Washington Street, Suite 325
Dedham, Massachusetts 02026
800.446.5518 | www.woodardcurran.com

WOODARD & CURRAN

COMMITMENT & INTEGRITY DRIVE RESULTS

THIS DOCUMENT IS THE PROPERTY OF WOODARD & CURRAN INC. AND ITS CLIENT. REPRODUCTION OR MODIFICATION WITHOUT WRITTEN PERMISSION IS PROHIBITED.

COMMONWEALTH OF MASSACHUSETTS
ANDREW FITZPATRICK ELECTRICAL ENGINEER NO. 37767
REGISTERED PROFESSIONAL ENGINEER
2-2-17

REV	DESCRIPTION	DATE

DESIGNED BY: GW | CHECKED BY: AJF
DRAWN BY: PO | 229123-ED-101.dwg

BID ALTERNATE #1
HEADWORKS BUILDING
ELECTRICAL DEMOLITION PLAN

DEPARTMENT OF PUBLIC WORKS
NANTUCKET, MASSACHUSETTS

SURFSIDE WASTEWATER TREATMENT FACILITY UPGRADES

JOB NO.: 229123.00
DATE: SEPTEMBER 2016
SCALE: AS NOTED
SHEET: 84 OF 116

ED-101

\\woodardcurran.net\shared\Projects\229123 Nantucket MA Surfside WWTF Upgrades 2015-2016\wip\Drawings\Electrical\229123-ED-101.dwg, Sep 20, 2016 - 3:42pm

22x34 SHEET
1:1

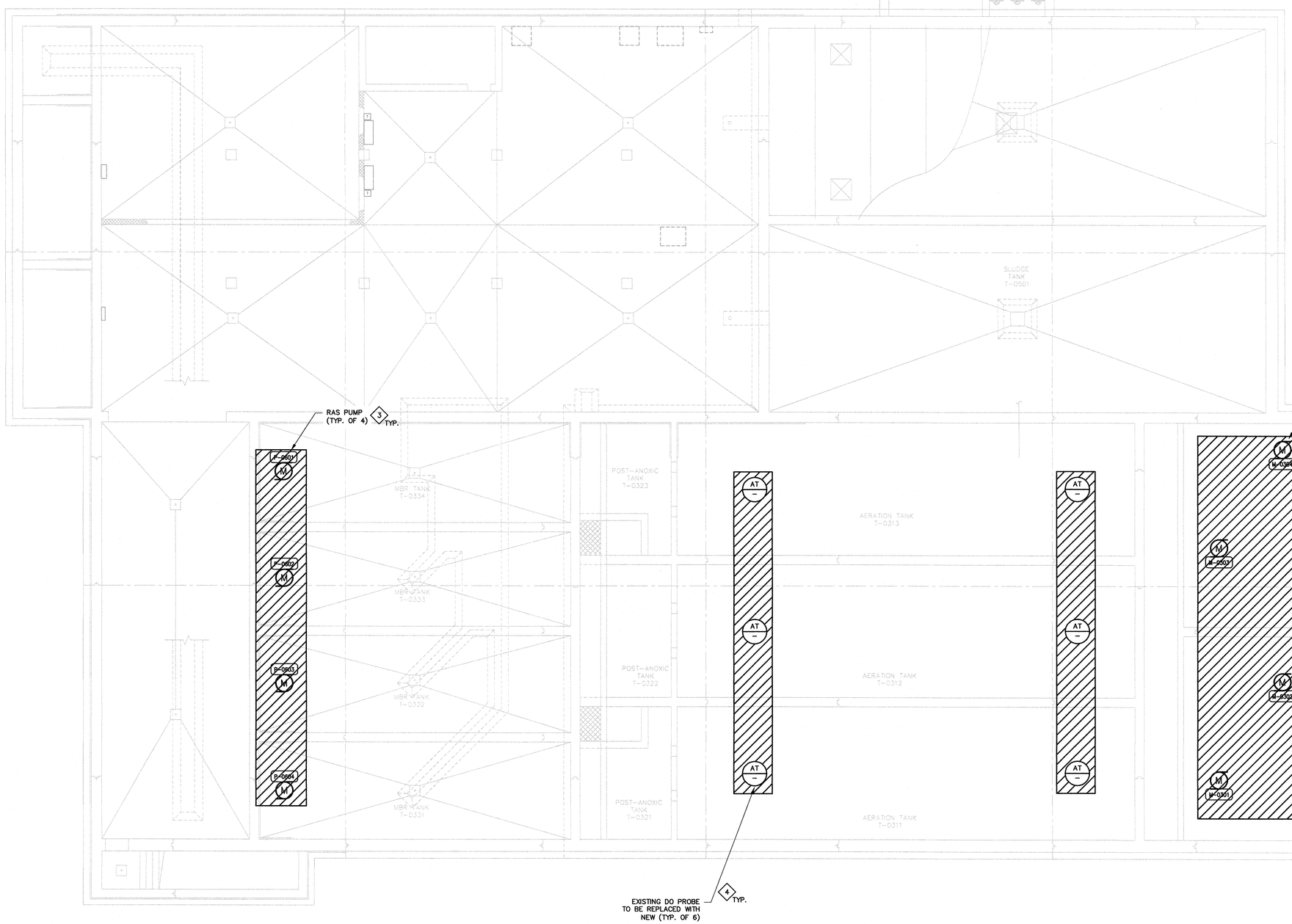

DEMOLITION NOTES:

1. THE INTENT OF THE DEMOLITION PLANS IS TO DOCUMENT EXISTING CONDITIONS. HOWEVER, ALL ELECTRICAL EQUIPMENT MAY NOT NECESSARILY BE INDICATED ON THE DRAWINGS. FIELD VERIFY AND ADJUST WORK TO SUIT ALL CONDITIONS FOUND.
2. ITEMS SHOWN WITH BOLD DESIGNATION INDICATE EXISTING ITEMS TO BE REMOVED. ALL ITEMS SHOWN WITH LIGHT DESIGNATION INDICATE EXISTING ITEMS TO REMAIN, UNLESS SPECIFICALLY INDICATED OTHERWISE. ALL ITEMS INDICATED FOR REMOVAL SHALL BE REMOVED WITH ALL ASSOCIATED HARDWARE AND ACCESSORIES COMPLETE BACK TO SOURCE INCLUDING, BUT NOT LIMITED TO: CONDUIT, BOXES, WIRING, CABLES, HANGERS, ETC.
3. IN ALL LOCATIONS WHERE EQUIPMENT AND WIRING IS TO REMAIN, BUT CANNOT BE DISCONNECTED WITHOUT DAMAGING, PROVIDE NEW EQUIPMENT AND HARDWARE AS REQUIRED, TO ENSURE PROPER OPERATIONS.
4. IN ALL SURROUNDING AREAS THAT ARE NOT BEING RENOVATED UNDER THIS CONTRACT, VERIFY THAT ELECTRICAL POWER, LIGHTING, AND SYSTEMS HAVE NOT BEEN AFFECTED BY THE ALTERATIONS. IN LOCATIONS WHERE SYSTEMS ARE AFFECTED, PROVIDE ALL WORK AS REQUIRED TO MAINTAIN PROPER OPERATIONS OF THESE SYSTEMS.
5. THE CONTRACTOR SHALL ARRANGE TO EXECUTE ALL WORK AT SUCH TIMES AND IN SUCH LOCATIONS TO PROVIDE UNINTERRUPTED SERVICES FOR THE BUILDING, OR ANY OF ITS SECTIONS. IF NECESSARY, TEMPORARY WORK SHALL BE INSTALLED TO PROVIDE FOR THIS CONDITION. THE INTENT IS FOR ALL NEW EQUIPMENT TO BE INSTALLED AND READY TO BE ENERGIZED PRIOR TO REMOVAL OF EXISTING EQUIPMENT TO MINIMIZE DOWNTIME TO THE GREATEST EXTENT POSSIBLE. AUTHORIZATION FOR INTERRUPTING SERVICES SHALL BE OBTAINED IN WRITING FROM THE OWNER.

KEYED NOTES:

1. DISCONNECT AND REMOVE ALL WIRING AND DISCONNECT SWITCHES ASSOCIATED WITH PRE-ANOXIC MIXERS #1 & #2. REMOVE ALL EXISTING WIRING BACK TO EXISTING MCC10. EXISTING CONDUIT TO REMAIN FOR RE-USE. DISCONNECT AND REMOVE ALL ELECTRICAL AND DISCONNECT SWITCHES ASSOCIATED WITH PRE-ANOXIC MIXERS #3 & #4.
2. DISCONNECT AND REMOVE ALL ELECTRICAL ASSOCIATED WITH AERATION LIFT PUMPS INCLUDING DISCONNECT SWITCHES AND VFDS LOCATED IN GROUND LEVEL BLOWER ROOM. SEE SHEET ED-302 FOR VFD LOCATIONS.
3. DISCONNECT AND REMOVE ALL ELECTRICAL ASSOCIATED WITH RAS PUMPS INCLUDING DISCONNECT SWITCHES AND VFDS LOCATED IN GROUND LEVEL BLOWER ROOM. SEE SHEET ED-302 FOR VFD LOCATIONS.
4. DISCONNECT AND REMOVE WIRING AND ELECTRICAL ASSOCIATED WITH DO PROBES IN PREPARATION FOR NEW.

12' 8' 4' 0 8' 16'

BAR SCALE
1/8" = 1'-0"
CHECK GRAPHIC SCALE BEFORE USING

ISSUED FOR BID

980 Washington Street, Suite 325
Dedham, Massachusetts 02026
800.446.5518 | www.woodardcurran.com
WOODARD & CURRAN
COMMITMENT & INTEGRITY DRIVE RESULTS

THIS DOCUMENT IS THE PROPERTY OF WOODARD & CURRAN INC. AND ITS CLIENT. REPRODUCTION OR MODIFICATION WITHOUT WRITTEN PERMISSION IS PROHIBITED.

COMMONWEALTH OF MASSACHUSETTS
ANDREW FITZPATRICK
ELECTRICAL
NO. 50751
REGISTERED PROFESSIONAL ENGINEER
2016-09-27

REV	DESCRIPTION	DATE

DESIGNED BY: GW
DRAWN BY: PO
CHECKED BY: AJF
229123-ED-301.dwg

ADVANCED TREATMENT
BUILDING BASEMENT
DEMOLITION PLAN

DEPARTMENT OF PUBLIC WORKS
NANTUCKET, MASSACHUSETTS

SURFSIDE WASTEWATER
TREATMENT FACILITY
UPGRADES

JOB NO.: 229123.00
DATE: SEPTEMBER 2016
SCALE: AS NOTED
SHEET: 85 OF 116

ED-301

\\woodardcurran.net\shared\Projects\229123 Nantucket MA Surfside WWTF Upgrades 2015-2016\wip\Drawings\Electrical\229123-ED-301.dwg, Sep 20, 2016 - 3:42pm

22x34 SHEET
1:1

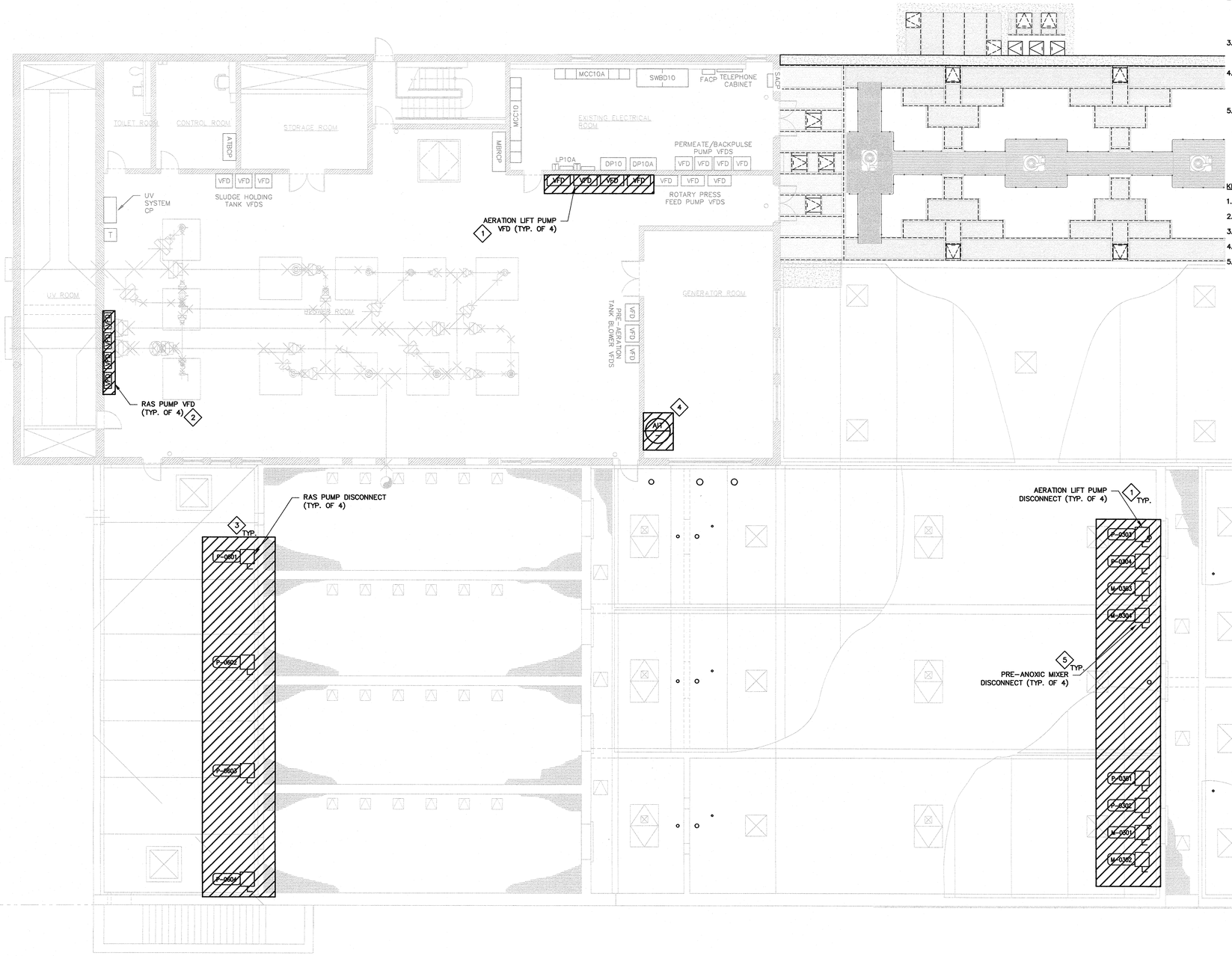

DEMOLITION NOTES:

1. THE INTENT OF THE DEMOLITION PLANS IS TO DOCUMENT EXISTING CONDITIONS. HOWEVER, ALL ELECTRICAL EQUIPMENT MAY NOT NECESSARILY BE INDICATED ON THE DRAWINGS. FIELD VERIFY AND ADJUST WORK TO SUIT ALL CONDITIONS FOUND.
2. ITEMS SHOWN WITH BOLD DESIGNATION INDICATE EXISTING ITEMS TO BE REMOVED. ALL ITEMS SHOWN WITH LIGHT DESIGNATION INDICATE EXISTING ITEMS TO REMAIN, UNLESS SPECIFICALLY INDICATED OTHERWISE. ALL ITEMS INDICATED FOR REMOVAL SHALL BE REMOVED WITH ALL ASSOCIATED HARDWARE AND ACCESSORIES COMPLETE BACK TO SOURCE INCLUDING, BUT NOT LIMITED TO: CONDUIT, BOXES, WIRING, CABLES, HANGERS, ETC.
3. IN ALL LOCATIONS WHERE EQUIPMENT AND WIRING IS TO REMAIN, BUT CANNOT BE DISCONNECTED WITHOUT DAMAGING, PROVIDE NEW EQUIPMENT AND HARDWARE AS REQUIRED, TO ENSURE PROPER OPERATIONS.
4. IN ALL SURROUNDING AREAS THAT ARE NOT BEING RENOVATED UNDER THIS CONTRACT, VERIFY THAT ELECTRICAL POWER, LIGHTING, AND SYSTEMS HAVE NOT BEEN AFFECTED BY THE ALTERATIONS. IN LOCATIONS WHERE SYSTEMS ARE AFFECTED, PROVIDE ALL WORK AS REQUIRED TO MAINTAIN PROPER OPERATIONS OF THESE SYSTEMS.
5. THE CONTRACTOR SHALL ARRANGE TO EXECUTE ALL WORK AT SUCH TIMES AND IN SUCH LOCATIONS TO PROVIDE UNINTERRUPTED SERVICES FOR THE BUILDING, OR ANY OF ITS SECTIONS. IF NECESSARY, TEMPORARY WORK SHALL BE INSTALLED TO PROVIDE FOR THIS CONDITION. THE INTENT IS FOR ALL NEW EQUIPMENT TO BE INSTALLED AND READY TO BE ENERGIZED PRIOR TO REMOVAL OF EXISTING EQUIPMENT TO MINIMIZE DOWNTIME TO THE GREATEST EXTENT POSSIBLE. AUTHORIZATION FOR INTERRUPTING SERVICES SHALL BE OBTAINED IN WRITING FROM THE OWNER.

KEYED NOTES:

1. DISCONNECT AND REMOVE VFDS AND ALL ELECTRICAL ASSOCIATED WITH AERATION LIFT PUMPS.
2. DISCONNECT AND REMOVE VFDS AND ALL ELECTRICAL ASSOCIATED WITH RAS PUMPS..
3. DISCONNECT AND REMOVE ALL DISCONNECT SWITCHES ASSOCIATED WITH RAS PUMPS. SEE SHEET ED-301 FOR MOTOR LOCATIONS.
4. DISCONNECT AND REMOVE ALL ELECTRICAL ASSOCIATED WITH AERATION BASIN DO, NITRATE, AND ORP ANALYZER.
5. DISCONNECT AND REMOVE ALL DISCONNECT SWITCHES ASSOCIATED WITH PRE-ANOXIC MIXERS. SEE SHEET ED-301 FOR MOTOR LOCATIONS

6' 4' 2' 0 4' 8'

BAR SCALE
1/4" = 1'-0"
CHECK GRAPHIC SCALE BEFORE USING

ISSUED FOR BID

980 Washington Street, Suite 325
Dedham, Massachusetts 02026
800.446.5518 | www.woodardcurran.com

WOODARD & CURRAN
COMMITMENT & INTEGRITY DRIVE RESULTS

THIS DOCUMENT IS THE PROPERTY OF WOODARD & CURRAN INC., AND ITS CLIENT. REPRODUCTION OR MODIFICATION WITHOUT WRITTEN PERMISSION IS PROHIBITED.

COMMONWEALTH OF MASSACHUSETTS
ANDREW PETTENGILL
ELECTRICAL
NO. 50751
REGISTERED PROFESSIONAL ENGINEER
2016-09-27

REV	DESCRIPTION	DATE

DESIGNED BY: GW
DRAWN BY: PO
CHECKED BY: AJF
229123-ED-302.dwg

ADVANCED TREATMENT BUILDING GROUND LEVEL DEMOLITION PLAN

DEPARTMENT OF PUBLIC WORKS
NANTUCKET, MASSACHUSETTS

SURFSIDE WASTEWATER TREATMENT FACILITY UPGRADES

JOB NO.: 229123.00
DATE: SEPTEMBER 2016
SCALE: AS NOTED
SHEET: 86 OF 116

ED-302

\\woodardcurran.net\shared\Projects\229123 Nantucket MA Surfside WWTF Upgrades 2015-2016\wip\Drawings\Electrical\229123-ED-302.dwg, Sep 20, 2016 - 3:43pm

22x34 SHEET
1:1

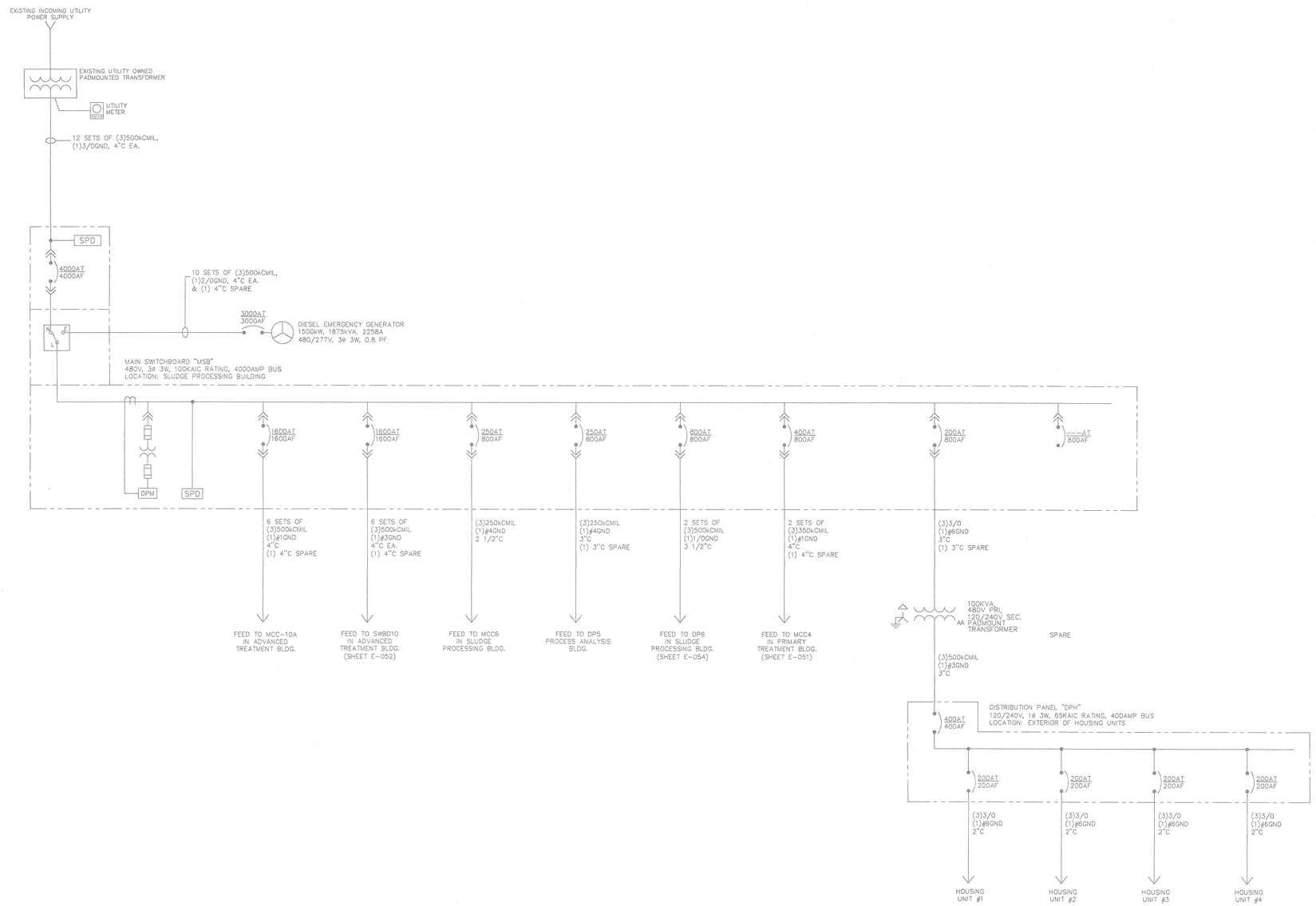

ISSUED FOR BID

980 Washington Street, Suite 325
Dedham, Massachusetts 02026
800.446.5518 | www.woodardcurran.com

COMMITMENT & INTEGRITY DRIVE RESULTS

WOODARD & CURRAN

THIS DOCUMENT IS THE PROPERTY OF WOODARD & CURRAN INC. AND ITS CLIENT. REPRODUCTION OR MODIFICATION WITHOUT WRITTEN PERMISSION IS PROHIBITED.

COMMONWEALTH OF MASSACHUSETTS
ANDREW FITZPATRICK ELECTRICAL NO. 32751
REGISTERED PROFESSIONAL ENGINEER
24.09.23

REV	DESCRIPTION	DATE

DESIGNED BY: GW | CHECKED BY: AJF
DRAWN BY: PO | 229123-E-050.dwg

MAIN SWITCHBOARD 'MSB' ONE-LINE DIAGRAM EXISTING CONDITIONS

DEPARTMENT OF PUBLIC WORKS
NANTUCKET, MASSACHUSETTS

SURFSIDE WASTEWATER TREATMENT FACILITY UPGRADES

JOB NO.: 229123.00
DATE: SEPTEMBER 2016
SCALE: XXX
SHEET: 87 OF 116

E-050

\\woodardcurran.net\shared\Projects\229123 Nantucket MA Surfside WWTF Upgrades 2015-2016\wip\Drawings\Electrical\229123-E-050.dwg, Sep 20, 2016 - 3:44pm

22x34 SHEET
1:1

GENERAL NOTES:
1. ALL ELECTRICAL ITEMS SHOWN WITH BOLD DESIGNATION SHALL BE CONSIDERED NEW; ALL ITEMS SHOWN WITH LIGHT DESIGNATION SHALL BE CONSIDERED EXISTING.

KEYED NOTES:
1. PROVIDE WIRING IN EXISTING CONDUIT FOR NEW PRIMARY SLUDGE PUMPS AS SHOWN.
2. PROVIDE NEW EATON CIRCUIT BREAKER BUCKET AND ALL NECESSARY MOUNTING HARDWARE FOR PRIMARY SCUM PUMP IN EXISTING SPACE. MATCH AIC RATING OF EXISTING BREAKERS.
3. PROVIDE NEW EATON CIRCUIT BREAKER BUCKET AND ALL NECESSARY MOUNTING HARDWARE FOR NEW HEADWORKS DISTRIBUTION PANEL 'PPHW' IN EXISTING SPACE.
4. RECONNECT EXISTING POWER & CONTROL WIRING TO NEW GRINDER CONTROL PANELS. PROVIDE NEW CONDUIT AND WIRE FROM NEW CONTROL PANELS TO PRIMARY SLUDGE PUMP GRINDERS. SEE SHEET E-201 FOR LOCATION AND CONNECTION OF CONTROL PANELS.

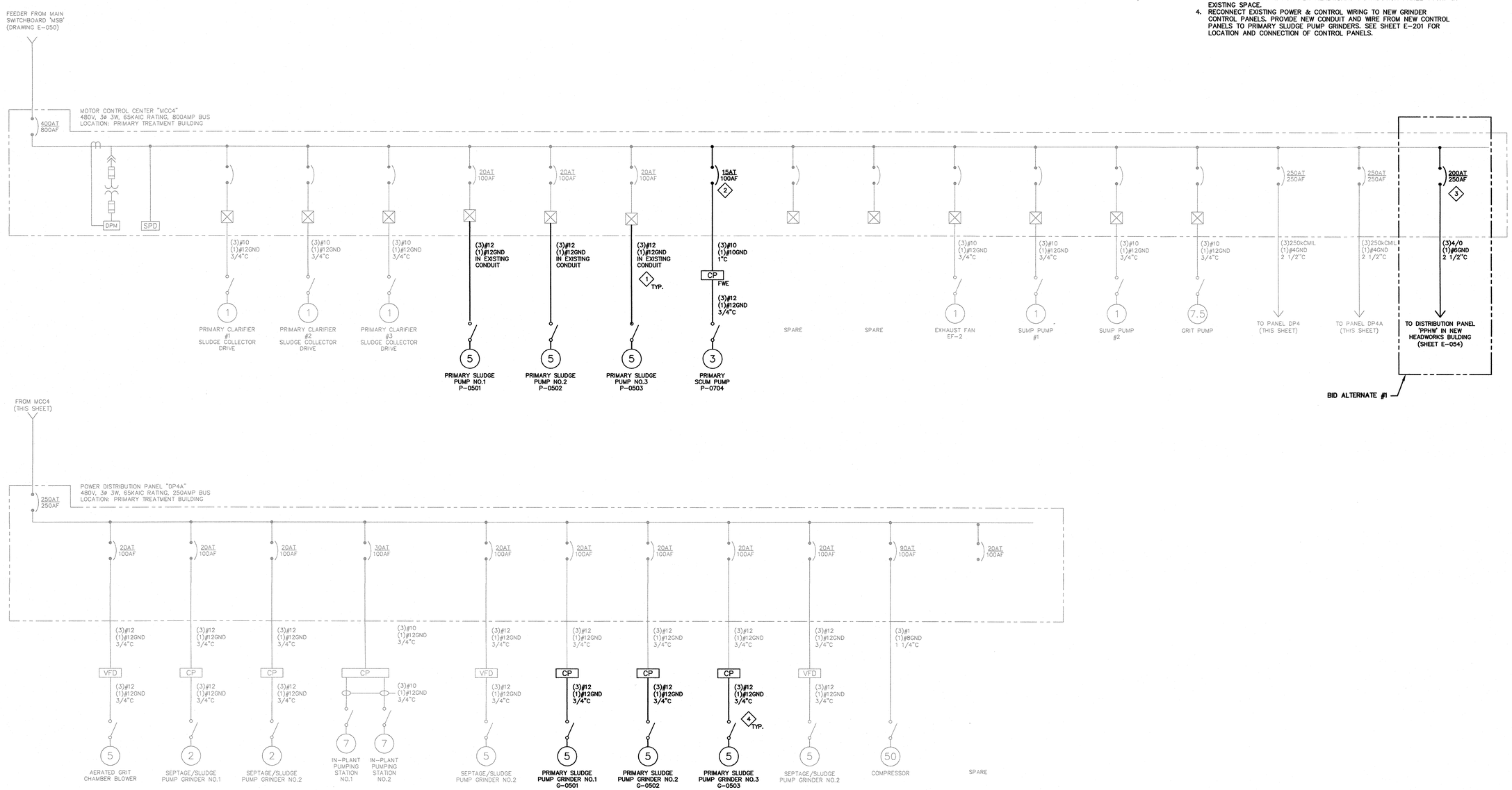

ISSUED FOR BID

WOODARD & CURRAN
980 Washington Street, Suite 325
Dedham, Massachusetts 02026
800.446.5518 | www.woodardcurran.com
COMMITMENT & INTEGRITY DRIVE RESULTS

THIS DOCUMENT IS THE PROPERTY OF WOODARD & CURRAN INC. AND ITS CLIENT. REPRODUCTION OR MODIFICATION WITHOUT WRITTEN PERMISSION IS PROHIBITED.

COMMONWEALTH OF MASSACHUSETTS
ANDREW FITZPATRICK
ELECTRICAL
NO. 50761
REGISTERED PROFESSIONAL ENGINEER
2016-07-23

REV	DESCRIPTION	DATE

DESIGNED BY: GW
DRAWN BY: PO
CHECKED BY: AJF
229123-E-051.dwg

PRIMARY TREATMENT BUILDING MCC4 & DP4A ONE-LINE DIAGRAMS

DEPARTMENT OF PUBLIC WORKS
NANTUCKET, MASSACHUSETTS

SURFSIDE WASTEWATER TREATMENT FACILITY UPGRADES

JOB NO.: 229123.00
DATE: SEPTEMBER 2016
SCALE: AS NOTED
SHEET: 88 OF 116

E-051

\\woodardcurran.net\shared\Projects\229123 Nantucket MA Surfside WWTF Upgrades 2015-2016\wip\Drawings\Electrical\229123-E-051.dwg, Sep 20, 2016 - 3:44pm

22x34 SHEET
1:1

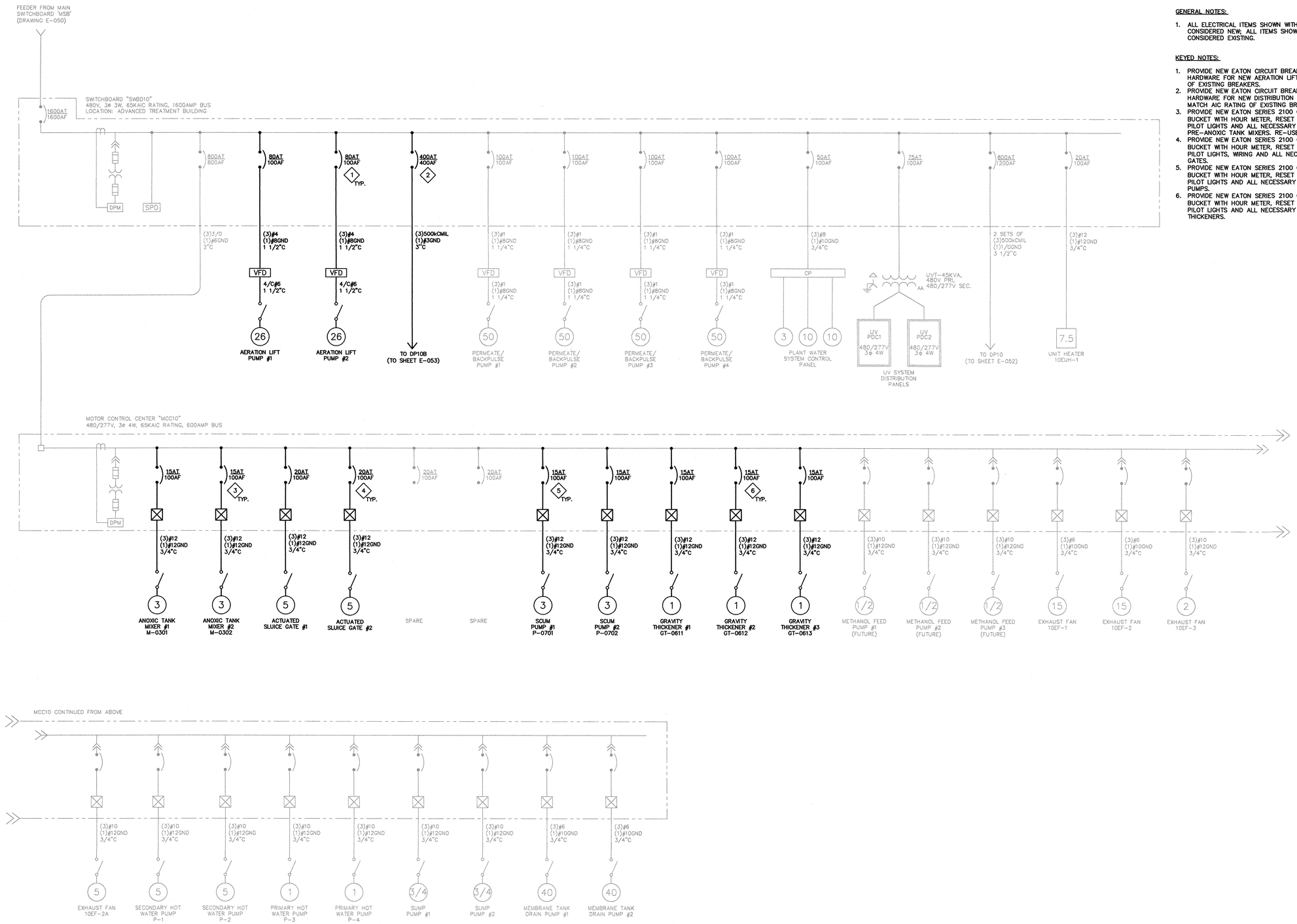

GENERAL NOTES:

1. ALL ELECTRICAL ITEMS SHOWN WITH BOLD DESIGNATION SHALL BE CONSIDERED NEW; ALL ITEMS SHOWN WITH LIGHT DESIGNATION SHALL BE CONSIDERED EXISTING.

KEYED NOTES:

1. PROVIDE NEW EATON CIRCUIT BREAKER AND ALL NECESSARY MOUNTING HARDWARE FOR NEW AERATION LIFT PUMPS #1 & #2. MATCH AIC RATING OF EXISTING BREAKERS.
2. PROVIDE NEW EATON CIRCUIT BREAKER AND ALL NECESSARY MOUNTING HARDWARE FOR NEW DISTRIBUTION PANEL 'DP10B' IN EXISTING SPACE. MATCH AIC RATING OF EXISTING BREAKERS.
3. PROVIDE NEW EATON SERIES 2100 CIRCUIT BREAKER/MOTOR STARTER BUCKET WITH HOUR METER, RESET BUTTON & RED 'RUN' AND GREEN 'OFF' PILOT LIGHTS AND ALL NECESSARY MOUNTING AND WIRING FOR PRE-ANOXIC TANK MIXERS. RE-USE EXISTING CONDUITS.
4. PROVIDE NEW EATON SERIES 2100 CIRCUIT BREAKER/MOTOR STARTER BUCKET WITH HOUR METER, RESET BUTTON & RED 'RUN' AND GREEN 'OFF' PILOT LIGHTS, WIRING AND ALL NECESSARY MOUNTING FOR NEW SLUICE GATES.
5. PROVIDE NEW EATON SERIES 2100 CIRCUIT BREAKER/MOTOR STARTER BUCKET WITH HOUR METER, RESET BUTTON & RED 'RUN' AND GREEN 'OFF' PILOT LIGHTS AND ALL NECESSARY MOUNTING HARDWARE FOR SCUM PUMPS.
6. PROVIDE NEW EATON SERIES 2100 CIRCUIT BREAKER/MOTOR STARTER BUCKET WITH HOUR METER, RESET BUTTON & RED 'RUN' AND GREEN 'OFF' PILOT LIGHTS AND ALL NECESSARY MOUNTING HARDWARE FOR GRAVITY THICKENERS.

ISSUED FOR BID

980 Washington Street, Suite 325
Dedham, Massachusetts 02026
800.446.5518 | www.woodardcurran.com
WOODARD & CURRAN
COMMITMENT & INTEGRITY DRIVE RESULTS

THIS DOCUMENT IS THE PROPERTY OF WOODARD & CURRAN INC. AND ITS CLIENT. REPRODUCTION OR MODIFICATION WITHOUT WRITTEN PERMISSION IS PROHIBITED.

COMMONWEALTH OF MASSACHUSETTS
ANDREW PATTERSON
ELECTRICAL
NO. 52751
REGISTERED PROFESSIONAL ENGINEER
2/10/2017

REV	DESCRIPTION	DATE

DESIGNED BY: GW | CHECKED BY: AJF
DRAWN BY: PO | 229123-E-052.dwg

ADVANCED TREATMENT BUILDING SWBD & MCC10
ONE-LINE DIAGRAMS

DEPARTMENT OF PUBLIC WORKS
NANTUCKET, MASSACHUSETTS

SURFSIDE WASTEWATER
TREATMENT FACILITY
UPGRADES

JOB NO.: 229123.00
DATE: JULY 2016
SCALE: AS NOTED
SHEET: 88 OF 113

E-052

\\woodardcurran.net\shared\Projects\229123 Nantucket MA Surfside WWTF Upgrades 2015-2016\wip\Drawings\Electrical\229123-E-052.dwg, Sep 20, 2016 - 3:45pm

22x34 SHEET
1:1

GENERAL NOTES:

1. ALL ELECTRICAL ITEMS SHOWN WITH BOLD DESIGNATION SHALL BE CONSIDERED NEW; ALL ITEMS SHOWN WITH LIGHT DESIGNATION SHALL BE CONSIDERED EXISTING.

KEYED NOTES:

1. PROVIDE NEW EATON CIRCUIT BREAKER FOR ROTARY PRESS FEED PUMP #4. MATCH AIC RATING OF EXISTING BREAKERS.
2. SEE SHEET E-302 FOR NEW DISTRIBUTION PANEL 'DP10B' LOCATION.
3. ROTARY PRESS FEED PUMP #4 AND GRINDER #4 ARE BID ALTERNATES.

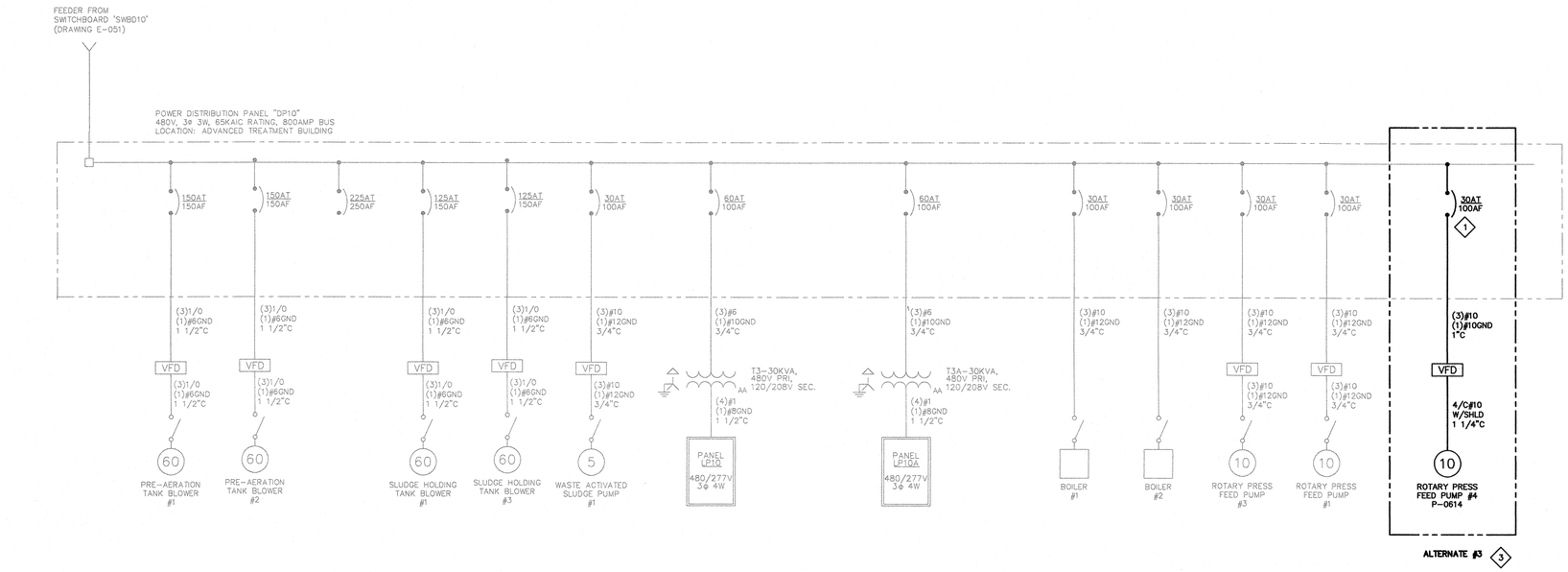

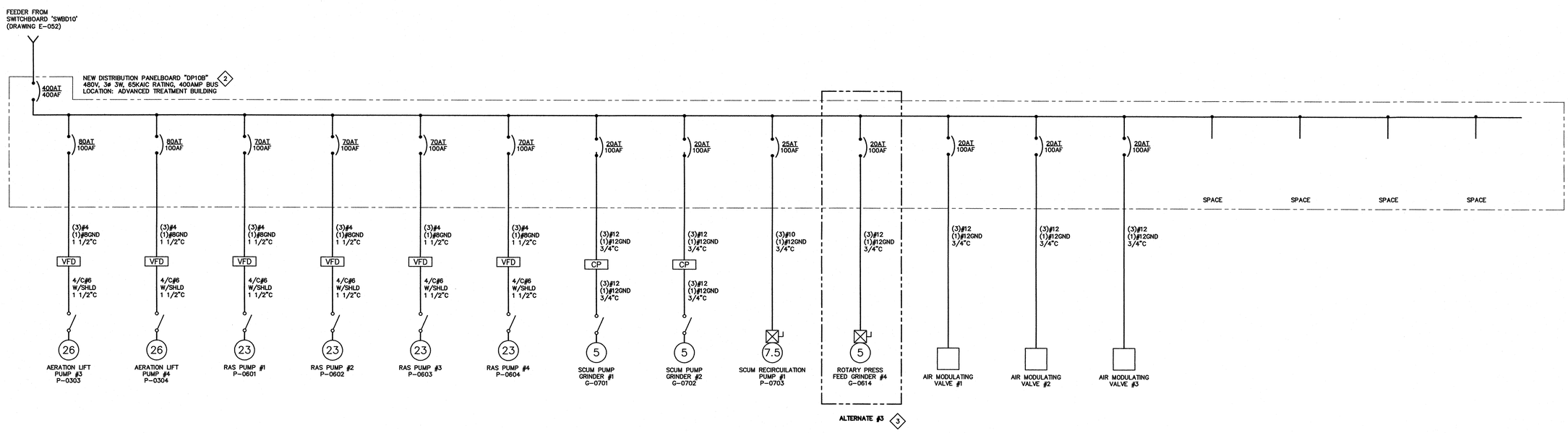

980 Washington Street, Suite 325
Dedham, Massachusetts 02026
800.446.5518 | www.woodardcurran.com

WOODARD & CURRAN

COMMITMENT & INTEGRITY DRIVE RESULTS

THIS DOCUMENT IS THE PROPERTY OF WOODARD & CURRAN INC. AND ITS CLIENT. REPRODUCTION OR MODIFICATION WITHOUT WRITTEN PERMISSION IS PROHIBITED.

COMMONWEALTH OF MASSACHUSETTS
ANDREW FITZPATRICK ELECTRICAL NO. 50751
REGISTERED PROFESSIONAL ENGINEER
9-20-16

REV	DESCRIPTION	DATE

DESIGNED BY: GW | CHECKED BY: AJF
DRAWN BY: PO | 229123-E-053.dwg

ADVANCED TREATMENT BUILDING DP10 & DP10B ONE-LINE DIAGRAMS

DEPARTMENT OF PUBLIC WORKS
NANTUCKET, MASSACHUSETTS

SURFSIDE WASTEWATER TREATMENT FACILITY UPGRADES

JOB NO.: 229123.00
DATE: SEPTEMBER 2016
SCALE: AS NOTED
SHEET: 90 OF 116

E-053

ISSUED FOR BID

\\woodardcurran.net\shared\Projects\229123 Nantucket MA Surfside WWTF Upgrades 2015-2016\wip\Drawings\Electrical\229123-E-053.dwg, Sep 20, 2016 - 3:45pm

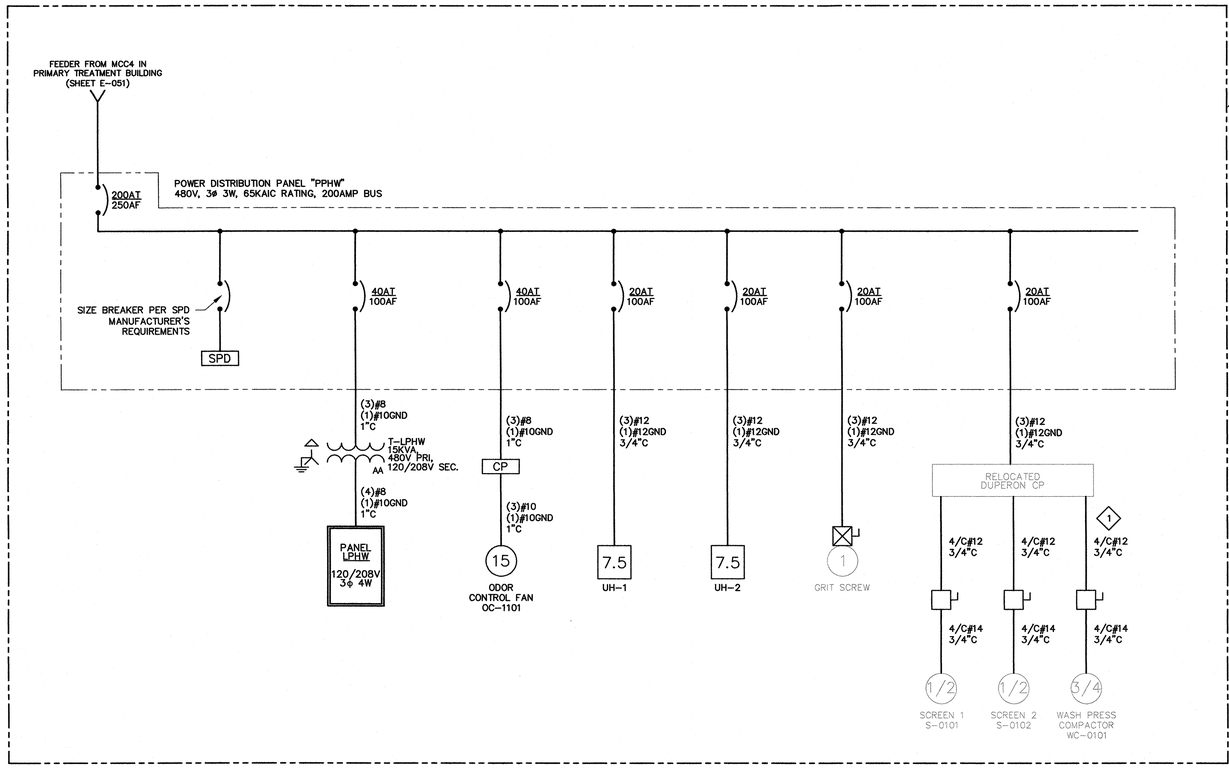

GENERAL NOTES:

1. ALL ELECTRICAL ITEMS SHOWN WITH BOLD DESIGNATION SHALL BE CONSIDERED NEW; ALL ITEMS SHOWN WITH LIGHT DESIGNATION SHALL BE CONSIDERED EXISTING.

KEYED NOTES:

1. SEE INSTRUMENTATION & CONTROLS RISER DIAGRAM ON SHEET E-601 FOR CONTROLS WIRING REQUIREMENTS TO AND FROM DUPERON CONTROL PANEL.

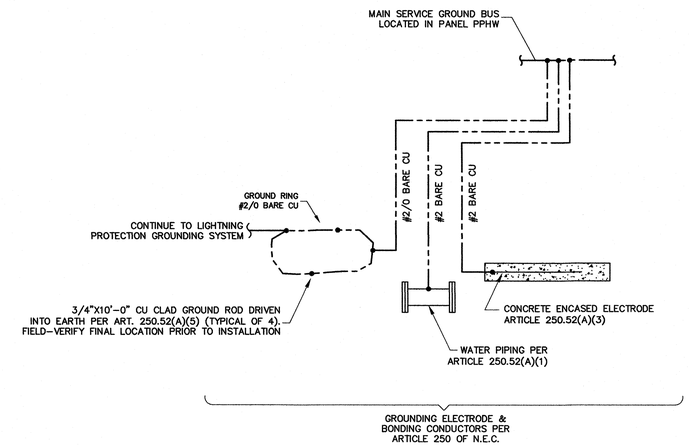

SYSTEM GROUNDING DETAIL

DIRECTORY	BRKR	POLE	CKT #	KVA	KVA LOADS A	B	C	KVA	CKT #	POLE	BRKR	DIRECTORY
ELEC. RM LIGHTS	20	1	1	0.36	1.08			0.72	2	1	20	HEADWORKS RM LIGHTS
ELEC. RM RECEPTACLES	20	1	3	0.36		0.90		0.54	4	1	20	HEADWORKS RM RECEPTACLES
ELEC. RM SMOKE DET.	20	1	5	0.18			0.90	0.72	6	1	20	HDWRKS/SCREEN RM SMOKE DET.
EXTERIOR LIGHTS	20	1	7	0.90	1.44			0.54	8	1	20	SCREEN RM LIGHTS
SUPPLY FAN SF-1	20	1	9	1.00		2.00		1.00	10	1	20	AC-1
SUMP PUMP	20	1	11	0.72			1.44	0.72	12	1	20	ROLL-UP DOOR
SCREEN RM RECEPTACLES	20	1	13	0.36	0.86			0.50	14	1	20	FIT-0110
SPARE			15			0.25		0.25	16	1	20	GRIT SCREW RECEPTACLE
SPARE			17				0.00		18			SPARE
SPACE			19		0.00				20			SPACE
SPACE			21			0.00			22			SPACE
SPACE			23				0.00		24			SPACE
				SUBTOTAL	3.38	3.15	2.34	SUBTOTAL				

VOLTAGE:	120/208	TOTAL kVA	8.87	PANEL NAME:	LPHW
MAIN BREAKER:	50	TOTAL AMPS	25	LOCATION:	HEADWORKS - ELECTRICAL ROOM
BUSES:	100			MOUNTING:	SURFACE
PH & WIRES:	3PH 4W			AIC RATING:	22 kAIC
NOTES:					

PANEL SCHEDULE
PANEL "LPHW"

LIGHT FIXTURE SCHEDULE

ALL FIXTURES SHALL BE FURNISHED COMPLETE WITH ALL HARDWARE, LAMPS, HANGERS, FITTINGS, ETC., FOR A COMPLETE AND PROPER INSTALLATION.

TYPE	MANUFACTURER	CATALOG NUMBER	LAMP TYPE	LAMP WATT	LAMP NO.	VOLTAGE	MTG.	BALLAST FACTOR	REMARKS/RECOMMENDATIONS
A	4' LED OPEN-STYLE INDUSTRIAL FIXTURE								
	COLUMBIA OR EQUAL	LCL4-40ML-EDU	LED	48	–	120/277	SUSPENDED	NA	MOUNT FIXTURES TO CEILING AT 10'-0" AFF. IN ELECTRICAL ROOM.
B	LED EXPLOSION PROOF FIXTURE								
	AZZ LIGHTING SYSTEMS OR EQUAL	XP-50L-4-2L-U	LED	46	–	120/277	SUSPENDED	NA	CHAIN HANG FIXTURES AT 15'-0" AFF. AND COORDINATE CLOSELY WITH MECHANICAL AND HVAC EQUIPMENT.
C	EXTERIOR WALL MOUNTED LED ENTRY LIGHT W/ TYPE IV DISTRIBUTION								
	HUBBELL OR EQUAL	LCC-12LU-5K-1	LED	12	–	120/277	WALL	NA	MOUNT FIXTURE AT 10 AFF. ABOVE DOORS.
	LED EXIT SIGN W/ TEST SWITCH AND AC ON LIGHT								
	DUAL-LITE (OR EQUAL)	LXURWE	LED	3.8	–	120/277	WALL	NA	PROVIDE WITH NUMBER OF HEADS AS INDICATED ON THE DRAWINGS.
	EMERGENCY LIGHT W/ TEST SWITCH AND AC ON LIGHT								
BATT	DUAL-LITE OR EQUAL	LZ65-12V	MR16	10	2	120/277	WALL	NA	PROVIDE WITH NUMBER OF HEADS AS INDICATED ON THE DRAWINGS. PROVIDE SELF DIAGNOSTIC ELECTRONICS.
	EXPLOSION-PROOF EMERGENCY LIGHT W/ TEST SWITCH AND AC ON LIGHT								
XP	DUAL-LITE (OR EQUAL)	LHZ636-S-1-H0806-SDA	LED	8	–	120/277	WALL	NA	PROVIDE WITH NUMBER OF HEADS AS INDICATED ON THE DRAWINGS.
	EXPLOSION-PROOF EMERGENCY LIGHT								
XP BATT	DUAL-LITE OR EQUAL	BATTERY UNIT: XPB-75P LUMINAIRE: EX-1CD-628	INCANDESCENT	28	2	120/277	WALL	NA	PROVIDE WITH NUMBER OF HEADS AS INDICATED ON THE DRAWINGS. PROVIDE SELF DIAGNOSTIC ELECTRONICS.

ISSUED FOR BID

980 Washington Street, Suite 325
Dedham, Massachusetts 02026
800.446.5518 | www.woodardcurran.com
COMMITMENT & INTEGRITY DRIVE RESULTS
WOODARD & CURRAN

THIS DOCUMENT IS THE PROPERTY OF WOODARD & CURRAN INC. AND ITS CLIENT. REPRODUCTION OR MODIFICATION WITHOUT WRITTEN PERMISSION IS PROHIBITED.

COMMONWEALTH OF MASSACHUSETTS ANDREW FITZPATRICK ELECTRICAL NO. 30751 REGISTERED PROFESSIONAL ENGINEER
9-26-23

REV	DESCRIPTION	DATE

DESIGNED BY: GW | CHECKED BY: AJF
DRAWN BY: PO | 229123-E-054.dwg

HEADWORKS BUILDING PANEL PPHW PANEL SCHEDULES

DEPARTMENT OF PUBLIC WORKS NANTUCKET, MASSACHUSETTS

SURFSIDE WASTEWATER TREATMENT FACILITY UPGRADES

JOB NO.: 229123.00
DATE: SEPTEMBER 2016
SCALE: NO SCALE
SHEET: 91 OF 116

E-054

\\woodardcurran.net\shares\Projects\229123 Nantucket MA Surfside WWTF Upgrades 2015-2016\wip\Drawings\Electrical\229123-E-054.dwg, Sep 20, 2016 - 3:46pm

22x34 SHEET 1:1

22x34 SHEET
1:1

GENERAL NOTES:

1. SEE SHEET E-055 FOR CONDUIT AND WIRE NOT SHOWN.

KEYED NOTES:

1. PROVIDE NEW WIRING FROM EXISTING EXPLOSION MOTORS TO NEW DISCONNECTS.
2. FORWARD/JOG/ESTOP CONTROL STATIONS FURNISHED BY MANUFACTURER. SEE INSTRUMENTATION & CONTROLS RISER ON SHEET E-601 FOR WIRING REQUIREMENTS.
3. ODOR CONTROL PANEL FURNISHED BY MANUFACTURER. PROVIDE UNISTRUT MOUNTING SUPPORTS AND WIRE TO FAN PER MANUFACTURER'S REQUIREMENTS.
4. REFER TO DIVISION 26 SPECIFICATIONS FOR NEW LIGHTNING PROTECTION SYSTEM.
5. PROVIDE DISCONNECT SWITCHES WITH INTEGRAL POSITION CONTACTS FOR POSITION-INDICATION, AUXILIARY CONTACT TO SHUT DOWN VFDS WHEN OPEN. SEE INSTRUMENTATION & CONTROLS RISER DIAGRAM ON SHEET E-601 FOR WIRING REQUIREMENTS.
6. RE-ROUTE THE EXISTING FLOAT SWITCH CABLES TO THE NEW SPLICE BOX. AND PROVIDE NEW FLOAT SWITCH CONDUCTORS BACK TO DUPERON CONTROL PANEL. SEE INSTRUMENTATION & CONTROLS RISER DIAGRAM ON SHEET E-601 FOR WIRING REQUIREMENTS.

NOTE:
ALL WORK ON THIS SHEET IS PART OF BID ALTERNATE #1.

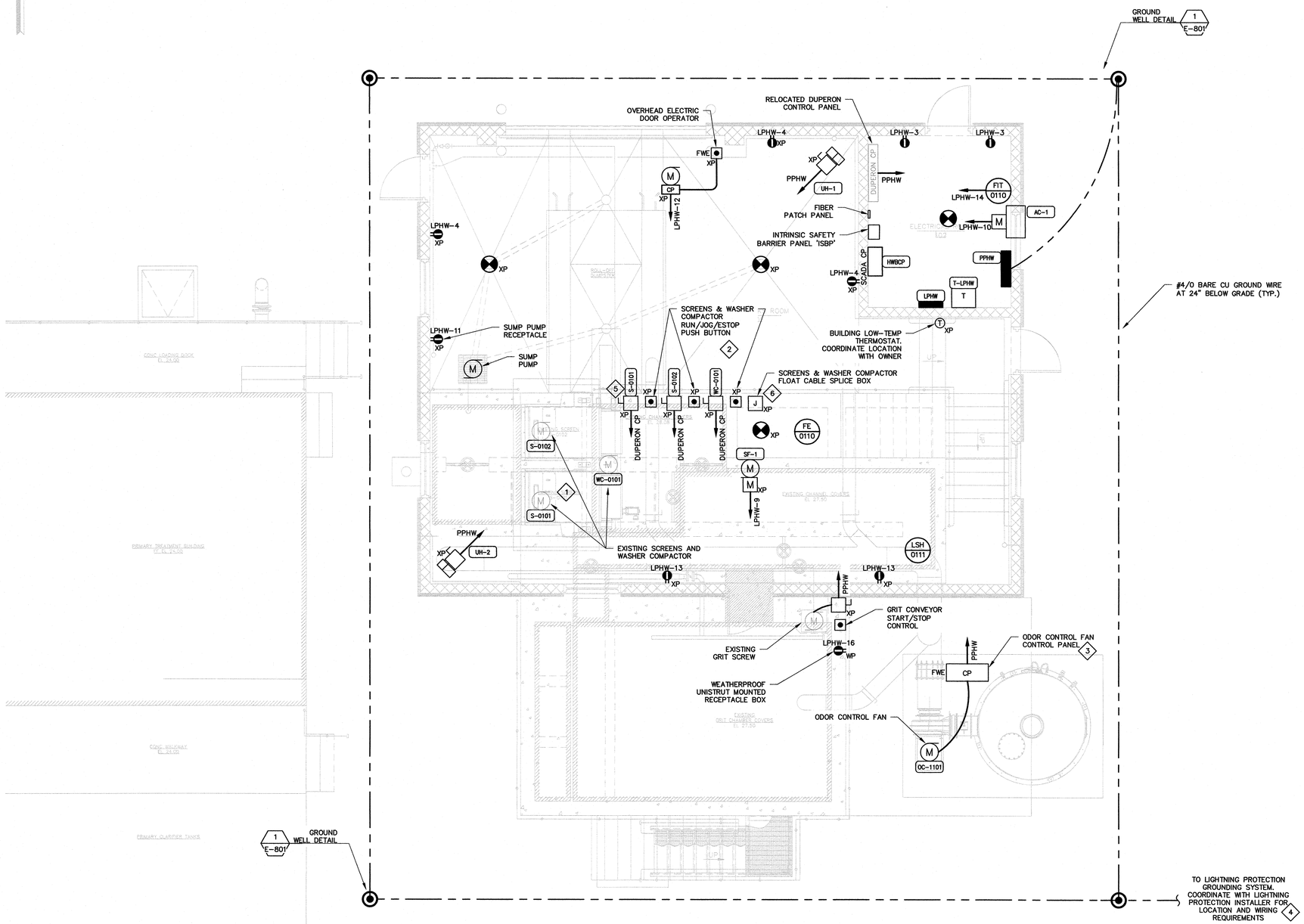

HEADWORKS BUILDING ELECTRICAL PLAN

SCALE: 1/4" = 1'-0"

6' 4' 2' 0 4' 8'

BAR SCALE
1/4" = 1'-0"
CHECK GRAPHIC SCALE BEFORE USING

ISSUED FOR BID

980 Washington Street, Suite 325
Dedham, Massachusetts 02026
800.446.5518 | www.woodardcurran.com

COMMITMENT & INTEGRITY DRIVE RESULTS

WOODARD & CURRAN

THIS DOCUMENT IS THE PROPERTY OF WOODARD & CURRAN INC. AND ITS CLIENT. REPRODUCTION OR MODIFICATION WITHOUT WRITTEN PERMISSION IS PROHIBITED.

COMMONWEALTH OF MASSACHUSETTS
ANDREW FITZPATRICK
ELECTRICAL
NO. 30751
REGISTERED PROFESSIONAL ENGINEER
24-09-23

REV	DESCRIPTION	DATE

DESIGNED BY: GW
DRAWN BY: PO
CHECKED BY: AJF
229123-E-101.dwg

BID ALTERNATE #1
HEADWORKS BUILDING
POWER & SYSTEMS PLAN

DEPARTMENT OF PUBLIC WORKS
NANTUCKET, MASSACHUSETTS

SURFSIDE WASTEWATER
TREATMENT FACILITY
UPGRADES

JOB NO.: 229123.00
DATE: SEPTEMBER 2016
SCALE: AS NOTED
SHEET: 92 OF 116

E-101

\\woodardcurran.net\shared\Projects\229123 Nantucket MA Surfside WWTF Upgrades 2015-2016\wip\Drawings\Electrical\229123-E-101.dwg, Sep 20, 2016 - 3:47pm

22x34 SHEET
1:1

GENERAL NOTES:

1. ALL ELECTRICAL ITEMS SHOWN WITH BOLD DESIGNATION SHALL BE CONSIDERED NEW; ALL ITEMS SHOWN WITH LIGHT DESIGNATION SHALL BE CONSIDERED EXISTING.

KEYED NOTES:

1. EXTERIOR LIGHTING CIRCUIT SHALL BE CONTROLLED VIA PHOTOCELL AND H/O/A SWITCH. MOUNT PHOTOCELL HIGH ON EXTERIOR WALL IN LOCATION INDICATED. LABEL H/O/A SWITCH "EXTERIOR LIGHTING."
2. PENETRATE FRP CEILING AND MOUNT LIGHT FIXTURES ON CEILING TRUSSES. SEAL ALL PENETRATIONS AND COORDINATE MOUNTING WITH STRUCTURAL AND ARCHITECTURAL PLANS AND ELEVATIONS. TYPICAL FOR FIXTURES IN HEADWORKS ROOM AND SCREENING AREA.

NOTE:

ALL WORK ON THIS SHEET IS PART OF BID ALTERNATE #1.

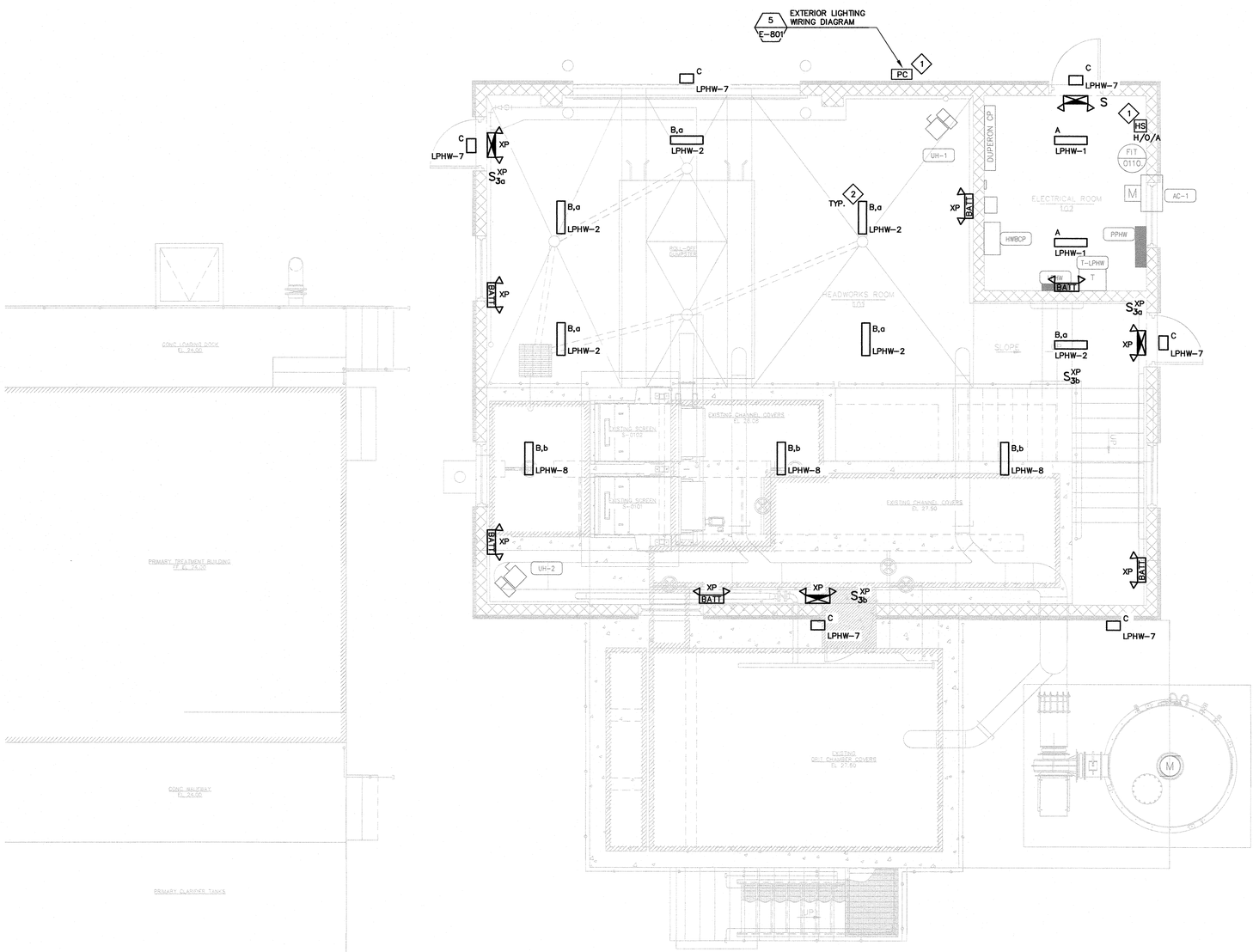

HEADWORKS BUILDING ELECTRICAL PLAN

SCALE: 1/4" = 1'-0"

6' 4' 2' 0 4' 8'

BAR SCALE
1/4" = 1'-0"
CHECK GRAPHIC SCALE BEFORE USING

ISSUED FOR BID

980 Washington Street, Suite 325
Dedham, Massachusetts 02026
800.446.5518 | www.woodardcurran.com

WOODARD & CURRAN

COMMITMENT & INTEGRITY DRIVE RESULTS

THIS DOCUMENT IS THE PROPERTY OF WOODARD & CURRAN INC. AND ITS CLIENT. REPRODUCTION OR MODIFICATION WITHOUT WRITTEN PERMISSION IS PROHIBITED.

COMMONWEALTH OF MASSACHUSETTS
ANDREW FITZPATRICK
ELECTRICAL
NO. 50751
REGISTERED PROFESSIONAL ENGINEER
09-23-2016

REV	DESCRIPTION	DATE

DESIGNED BY: GW
DRAWN BY: PO
CHECKED BY: AJF
229123-E-102.dwg

BID ALTERNATE #1
HEADWORKS BUILDING
LIGHTING PLAN

DEPARTMENT OF PUBLIC WORKS
NANTUCKET, MASSACHUSETTS

SURFSIDE WASTEWATER
TREATMENT FACILITY
UPGRADES

JOB NO.: 229123.00
DATE: SEPTEMBER 2016
SCALE: AS NOTED
SHEET: 93 OF 116

E-102

\\woodardcurran.net\shared\Projects\229123 Nantucket MA Surfside WWTF Upgrades 2015-2016\wip\Drawings\Electrical\229123-E-102.dwg, Sep 20, 2016 - 3:48pm

22x34 SHEET
1:1

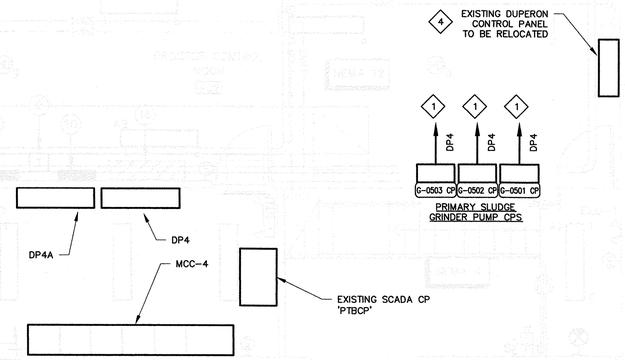

PRIMARY TREATMENT BUILDING GROUND LEVEL POWER PLAN

SCALE: 1/4" = 1'-0"

6' 4' 2' 0 4' 8'

BAR SCALE
1/4" = 1'-0"
CHECK GRAPHIC SCALE BEFORE USING

DEMOLITION NOTES:

1. ALL ITEMS SHOWN WITH LIGHT DESIGNATION INDICATE EXISTING EQUIPMENT TO REMAIN. ALL ITEMS SHOWN WITH BOLD DESIGNATION INDICATE EXISTING EQUIPMENT TO BE REMOVED, UNLESS SPECIFICALLY INDICATED OTHERWISE. ALL ITEMS INDICATED FOR REMOVAL SHALL BE REMOVED WITH ALL ASSOCIATED HARDWARE AND ACCESSORIES COMPLETE BACK TO SOURCE, INCLUDING, BUT NOT LIMITED TO CONDUIT, BOXES, WIRING, CABLES, HANGERS, SUPPORTS, ETC.
2. REFER TO ONE-LINE DIAGRAM, SHEET E-054, FOR CONDUIT & CABLE SIZES NOT SHOWN THIS SHEET.
3. THE INTENT OF THE DEMOLITION PLANS IS TO DOCUMENT EXISTING CONDITIONS. HOWEVER, ALL ELECTRICAL EQUIPMENT AND DUCTBANKS MAY NOT NECESSARILY BE INDICATED ON THE DRAWINGS. FIELD-VERIFY AND ADJUST WORK TO SUIT ALL CONDITIONS FOUND.
4. IN ALL LOCATIONS WHERE EQUIPMENT AND WIRING IS TO REMAIN, BUT CANNOT BE DISCONNECTED WITHOUT DAMAGING, PROVIDE NEW EQUIPMENT AND HARDWARE AS REQUIRED, ENSURING PROPER FACILITY.
5. IN ALL SURROUNDING AREAS THAT ARE NOT BEING RENOVATED UNDER THIS CONTRACT, VERIFY THAT ELECTRICAL POWER, LIGHTING, AND SYSTEMS HAVE NOT BEEN AFFECTED BY THE ALTERATIONS. IN LOCATIONS WHERE SYSTEMS ARE AFFECTED, PROVIDE ALL WORK AS REQUIRED TO MAINTAIN PROPER OPERATIONS OF THESE SYSTEMS.
6. THE CONTRACTOR SHALL ARRANGE TO EXECUTE ALL WORK AT SUCH TIMES AND IN SUCH LOCATIONS TO PROVIDE UNINTERRUPTED SERVICES FOR THE BUILDING, OR ANY OF ITS SECTIONS. IF NECESSARY, TEMPORARY WORK SHALL BE INSTALLED TO PROVIDE FOR THIS CONDITION. THE INTENT IS FOR ALL NEW EQUIPMENT TO BE INSTALLED AND READY TO BE ENERGIZED PRIOR TO REMOVAL OF EXISTING EQUIPMENT TO MINIMIZE DOWNTIME TO THE GREATEST EXTENT POSSIBLE. AUTHORIZATION FOR INTERRUPTING SERVICES SHALL BE OBTAINED IN WRITING FROM THE OWNER.

KEYED NOTES:

1. DISCONNECT AND REMOVE EXISTING GRINDER CONTROL PANELS AND REPLACE WITH NEW IN IDENTICAL LOCATION. RECONNECT ALL EXISTING POWER AND CONTROL WIRING TO NEW CONTROL PANELS. GRINDERS TO BE REPLACED WITH NEW. DISCONNECT AND REMOVE EXISTING DISCONNECT SWITCHES AND PROVIDE NEW WITH WIRING BACK TO GRINDER CONTROL PANEL.
2. EXISTING PRIMARY SLUDGE PUMPS TO BE REPLACED WITH NEW. PROVIDE NEW DISCONNECTS. SEE ONE-LINE DIAGRAM ON SHEET E-051 FOR NEW WIRING REQUIREMENTS.
3. REMOVE EXISTING WALL-MOUNTED PULLBOXES THAT FEED HEADWORKS AREA. CUT CONDUITS FLUSH WITH WALL AND SEAL COMPLETELY. PROVIDE NEW PULLBOXES FOR COMMUNICATIONS AND POWER WIRING TO FEED HEADWORKS BUILDING.
4. RELOCATE EXISTING DUPERON CONTROL PANEL TO NEW HEADWORKS BUILDING. SEE SHEET ED-101 FOR DEMOLITION REQUIREMENTS AND SHEETS E-101 AND E-054 FOR NEW LOCATION AND WIRING REQUIREMENTS.
5. DISCONNECT AND REMOVE FLOW METER AND REPLACE WITH NEW IN IDENTICAL LOCATION. EXISTING WIRING AND CONDUIT TO REMAIN FOR RECONNECTION TO NEW.

PRIMARY TREATMENT BUILDING BASEMENT POWER PLAN

SCALE: 3/8" = 1'-0"

4' 3' 2' 1' 0 3' 6'

BAR SCALE
3/8" = 1'-0"
CHECK GRAPHIC SCALE BEFORE USING

ISSUED FOR BID

980 Washington Street, Suite 325
Dedham, Massachusetts 02026
800.446.5518 | www.woodardcurran.com

WOODARD & CURRAN

COMMITMENT & INTEGRITY DRIVE RESULTS

THIS DOCUMENT IS THE PROPERTY OF WOODARD & CURRAN INC. AND ITS CLIENT. REPRODUCTION OR MODIFICATION WITHOUT WRITTEN PERMISSION IS PROHIBITED.

COMMONWEALTH OF MASSACHUSETTS
ANDREW FITZPATRICK
ELECTRICAL
NO. 30751
REGISTERED PROFESSIONAL ENGINEER
7-26-16

REV	DESCRIPTION	DATE

DESIGNED BY: GW
DRAWN BY: PO
CHECKED BY: AJF
229123-E-201.dwg

PRIMARY TREATMENT BUILDING GROUND LEVEL AND PIPE GALLERY POWER PLAN

DEPARTMENT OF PUBLIC WORKS
NANTUCKET, MASSACHUSETTS

SURFSIDE WASTEWATER TREATMENT FACILITY UPGRADES

JOB NO.: 229123.00
DATE: SEPTEMBER 2016
SCALE: AS NOTED
SHEET: 94 OF 116

E-201

\\woodardcurran.net\shared\Projects\229123 Nantucket MA Surfside WWTF Upgrades 2015-2016\wip\Drawings\Electrical\229123-E-201.dwg, Sep 20, 2016 - 3:48pm

22x34 SHEET
1:1

GENERAL NOTES:

1. REFER TO ONE-LINE DIAGRAM, SHEET E-052 & E-053 FOR CONDUIT & WIRE SIZES NOT SHOWN THIS SHEET.

KEYED NOTES:

1. ROTARY PRESS FEED PUMP #4 AND GRINDER #4 ARE BID ALTERNATES.
2. INSTALL CONDUITS TO CEILING OF TANK OR HIGH ON SIDE WALL. COORDINATE FINAL INSTALLATION WITH OWNER AND ENGINEER PRIOR TO COMMENCING WORKS.
3. PROVIDE ROTARY PRESS FEED PUMP #4 DISCONNECT SWITCH WITH INTEGRAL POSITION CONTACTS FOR POSITION-INDICATION, AUXILIARY CONTACT TO SHUT DOWN VFDS WHEN OPEN. SEE INSTRUMENTATION & CONTROLS RISER DIAGRAM ON SHEET E-601 FOR WIRING REQUIREMENTS.
4. PROVIDE (1) 120V CIRCUIT TO AMMONIA ANALYZER AIR COMPRESSOR, (2)#14 IN 3/4"C AND (1) NEW 20A-1P CIRCUIT BREAKER IN EXISTING PANEL LP10C.

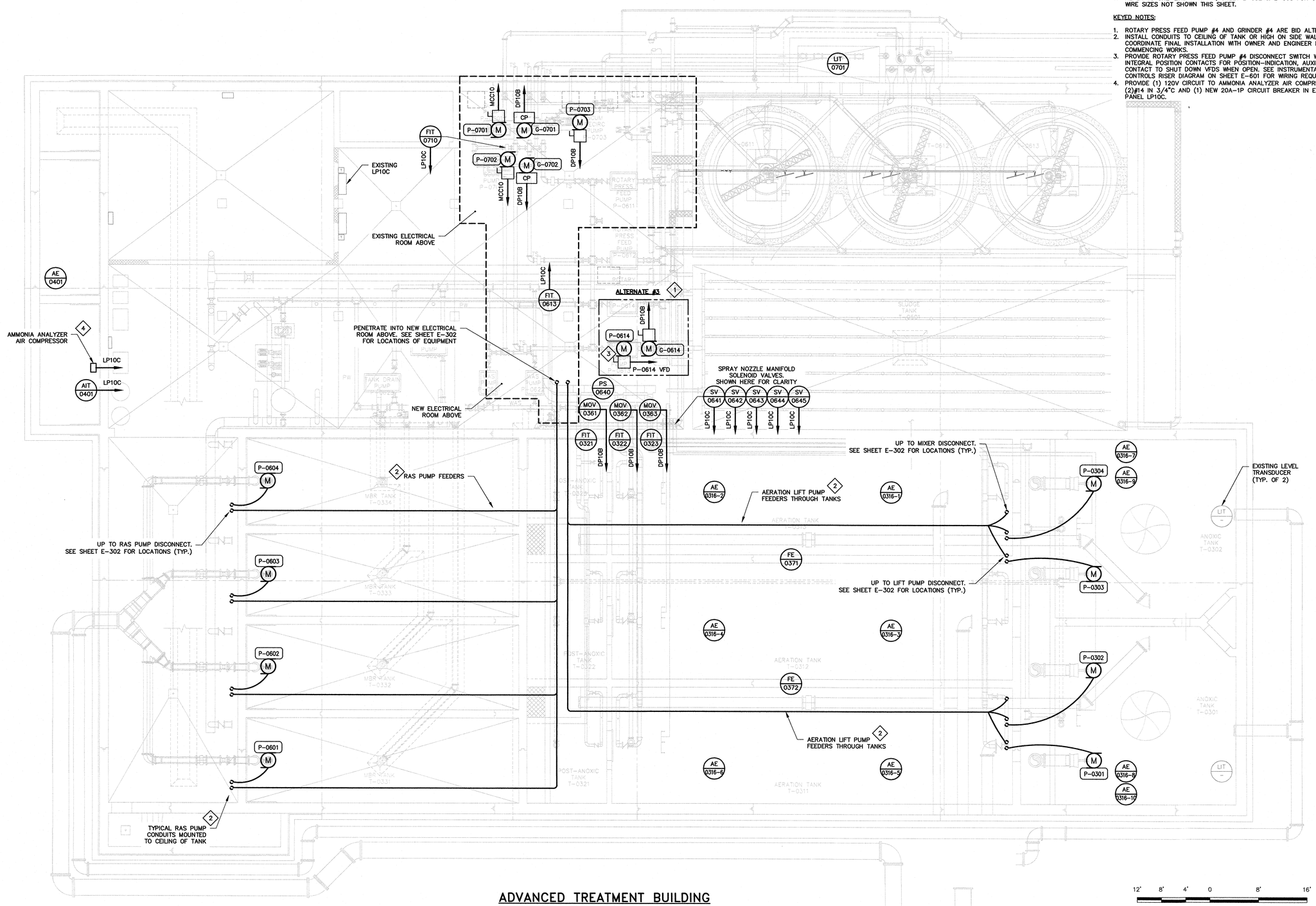

ADVANCED TREATMENT BUILDING BASEMENT POWER PLAN

SCALE: 1/8" = 1'-0"

12' 8' 4' 0 8' 16'
BAR SCALE
1/8" = 1'-0"
CHECK GRAPHIC SCALE BEFORE USING

ISSUED FOR BID

WOODARD & CURRAN
980 Washington Street, Suite 325
Dedham, Massachusetts 02026
800.446.5518 | www.woodardcurran.com
COMMITMENT & INTEGRITY DRIVE RESULTS

THIS DOCUMENT IS THE PROPERTY OF WOODARD & CURRAN INC. AND ITS CLIENT. REPRODUCTION OR MODIFICATION WITHOUT WRITTEN PERMISSION IS PROHIBITED.

COMMONWEALTH OF MASSACHUSETTS
ANDREW FITZPATRICK
ELECTRICAL
NO. 50781
REGISTERED PROFESSIONAL ENGINEER
2016-09-23

REV	DESCRIPTION	DATE

DESIGNED BY: GW
DRAWN BY: PO
CHECKED BY: AJF
229123-E-301.dwg

ADVANCED TREATMENT BUILDING BASEMENT POWER PLAN

DEPARTMENT OF PUBLIC WORKS
NANTUCKET, MASSACHUSETTS

SURFSIDE WASTEWATER TREATMENT FACILITY UPGRADES

JOB NO.: 229123.00
DATE: SEPTEMBER 2016
SCALE: AS NOTED
SHEET: 95 OF 116

E-301

\\woodardcurran.net\shared\Projects\229123 Nantucket MA Surfside WWTF Upgrades 2015-2016\wip\Drawings\Electrical\229123-E-301.dwg, Sep 20, 2016 - 3:49pm

22x34 SHEET
1:1

GENERAL NOTES:

1. REFER TO ONE-LINE DIAGRAM, SHEET E-052 AND E-053 FOR CONDUIT & WIRE SIZES NOT SHOWN THIS SHEET.

KEYED NOTES:

1. PROVIDE NEW 40A-2P CIRCUIT BREAKER IN EXISTING PANEL LP10 FOR NEW CONDENSING UNIT CU-1. AIR CONDITIONER AC-2 POWERED FROM CU-1. COORDINATE WITH HVAC CONTRACTOR FOR EXACT WIRING BETWEEN UNITS.
2. PROVIDE AERATION LIFT PUMP AND RAS PUMP DISCONNECT SWITCHES WITH INTEGRAL POSITION CONTACTS FOR POSITION-INDICATION, AUXILIARY CONTACT TO SHUT DOWN VFDS WHEN OPEN. SEE INSTRUMENTATION & CONTROLS RISER DIAGRAM ON SHEET E-601 FOR WIRING REQUIREMENTS.
3. PROVIDE (1) NEW 20A-1P CIRCUIT BREAKER IN EXISTING PANEL LP10A AND (2)#12, (1)#12GND IN 3/4"C FOR AERATION BASIN DO, NITRATE, AND ORP ANALYZER.
4. CONNECT GRAVITY THICKENER LIGHTNING PROTECTION GROUNDING SYSTEM TO EXISTING ADVANCED TREATMENT BUILDING GROUNDING GRID. COORDINATE WITH LIGHTNING PROTECTION INSTALLER FOR LOCATION AND WIRING REQUIREMENTS. SEE DIVISION 26 SPECIFICATIONS FOR WIRING REQUIREMENTS.
5. CONNECT PROBES TO VENDOR-SUPPLIED SENSOR JUNCTION BOX. SEE SHEET E-301 FOR PROBE LOCATIONS AND E-601 FOR WIRING REQUIREMENTS.
6. FLOW TRANSMITTERS FIT-0371 AND 0372 CONNECT TO SUBMERGED FLOW ELEMENTS FE-0371 AND 0372. SEE SHEET E-301 FOR FLOW ELEMENT LOCATIONS AND E-601 FOR WIRING REQUIREMENTS.
7. PROVIDE NEW 120V GFCI RECEPTACLE IN WEATHERPROOF ENCLOSURE. PROVIDE A 20A-1P CIRCUIT BREAKER IN PANEL LP10A AND (2)#12, (1)#12G IN 3/4"C FOR NEW RECEPTACLE.
8. PROVIDE (1) NEW 20A-1P CIRCUIT BREAKER IN EXISTING PANEL LP10A AND (2)#12, (1)#12GND IN 3/4"C FOR PVC PIPE HEAT TRACE.

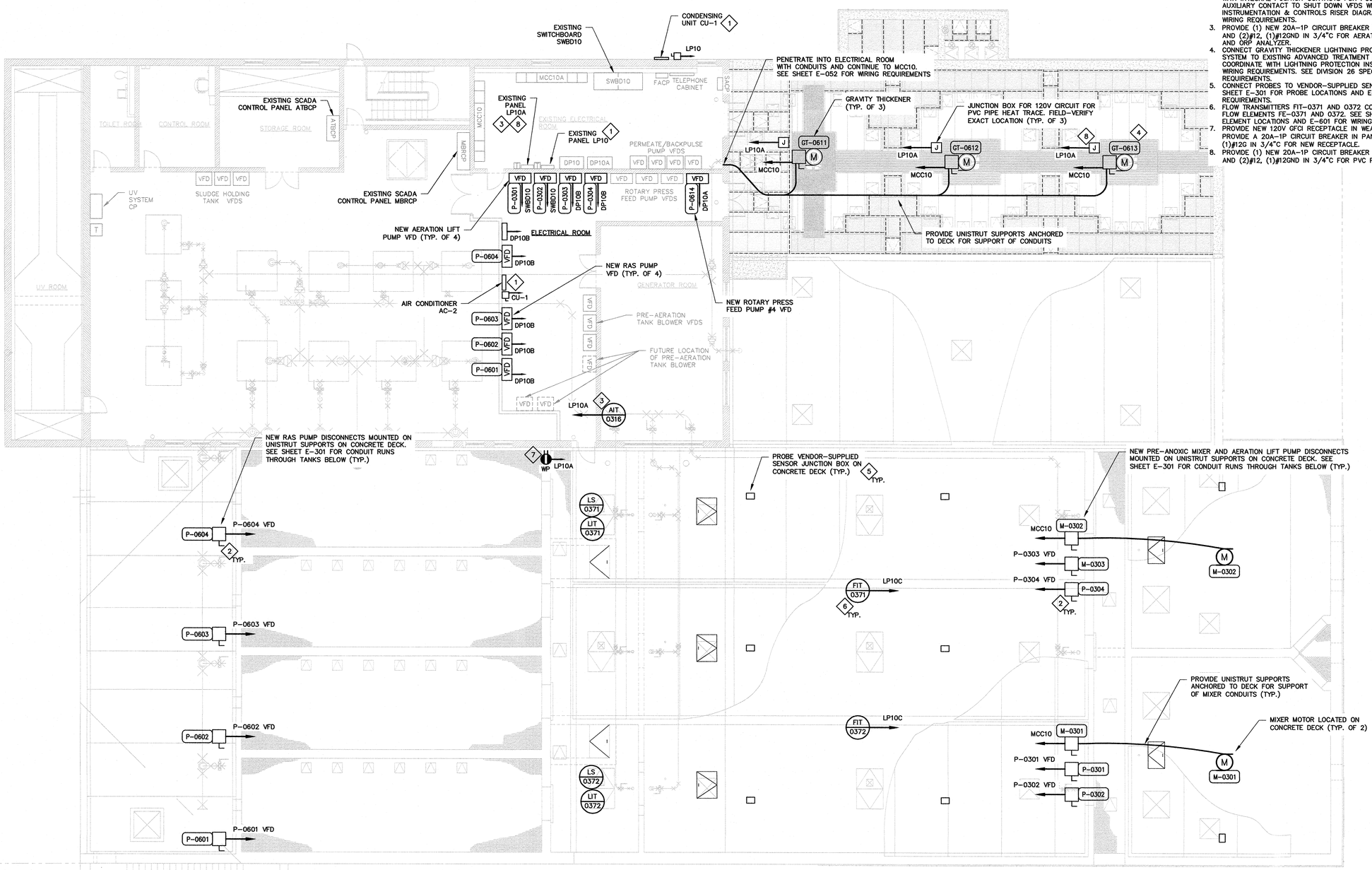

ADVANCED TREATMENT BUILDING GROUND LEVEL POWER PLAN

SCALE: 1/8" = 1'-0"

12' 8' 4' 0 8' 16'

BAR SCALE
1/8" = 1'-0"
CHECK GRAPHIC SCALE BEFORE USING

ISSUED FOR BID

980 Washington Street, Suite 325
Dedham, Massachusetts 02026
800.446.5518 | www.woodardcurran.com

COMMITMENT & INTEGRITY DRIVE RESULTS

WOODARD & CURRAN

THIS DOCUMENT IS THE PROPERTY OF WOODARD & CURRAN INC. AND ITS CLIENT. REPRODUCTION OR MODIFICATION WITHOUT WRITTEN PERMISSION IS PROHIBITED.

COMMONWEALTH OF MASSACHUSETTS
ANDREW FITZPATRICK ELECTRICAL
NO. 50751
REGISTERED PROFESSIONAL ENGINEER
9-20-16

REV	DESCRIPTION	DATE

DESIGNED BY: GW
DRAWN BY: PO
CHECKED BY: AJF
229123-E-302.dwg

ADVANCED TREATMENT BUILDING GROUND LEVEL POWER PLAN

DEPARTMENT OF PUBLIC WORKS
NANTUCKET, MASSACHUSETTS

SURFSIDE WASTEWATER TREATMENT FACILITY UPGRADES

JOB NO.: 229123.00
DATE: SEPTEMBER 2016
SCALE: AS NOTED
SHEET: 96 OF 116

E-302

\\woodardcurran.net\shared\Projects\229123 Nantucket MA Surfside WWTF Upgrades 2015-2016\wip\Drawings\Electrical\229123-E-302.dwg, Sep 20, 2016 - 3:40pm

22x34 SHEET
1:1

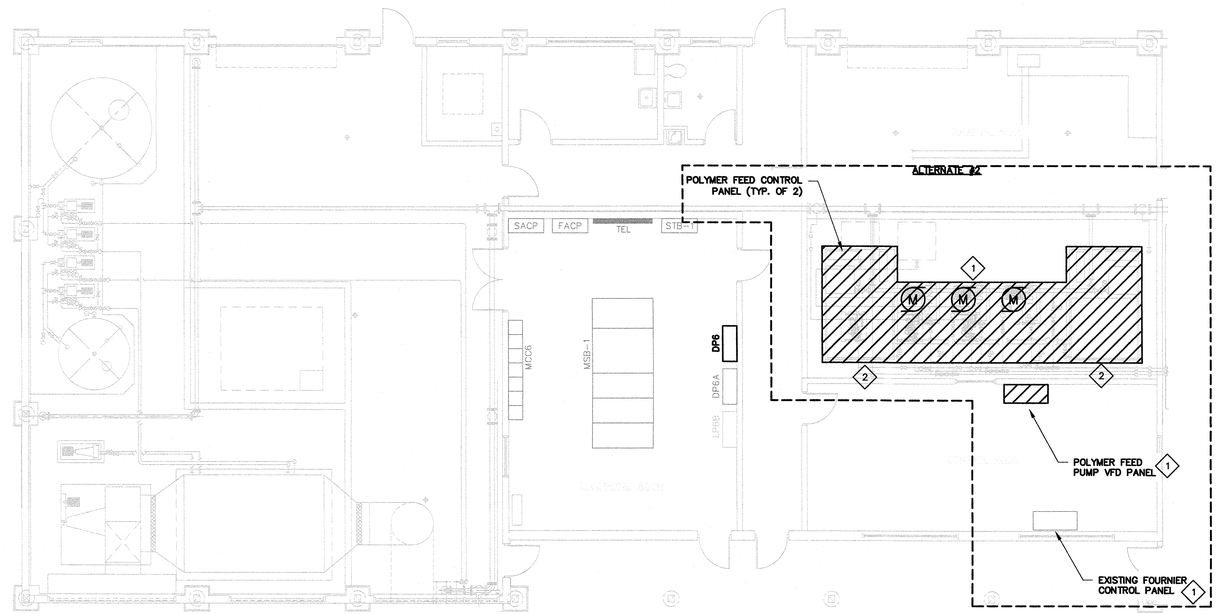

SLUDGE PROCESSING BUILDING DEMOLITION PLAN

SCALE: 1/8" = 1'-0"

DEMOLITION NOTES:

1. THE INTENT OF THE DEMOLITION PLANS IS TO DOCUMENT EXISTING CONDITIONS. HOWEVER, ALL ELECTRICAL EQUIPMENT MAY NOT NECESSARILY BE INDICATED ON THE DRAWINGS. FIELD VERIFY AND ADJUST WORK TO SUIT ALL CONDITIONS FOUND.
2. ITEMS SHOWN WITH BOLD DESIGNATION INDICATE EXISTING ITEMS TO BE REMOVED. ALL ITEMS SHOWN WITH LIGHT DESIGNATION INDICATE EXISTING ITEMS TO REMAIN, UNLESS SPECIFICALLY INDICATED OTHERWISE. ALL ITEMS INDICATED FOR REMOVAL SHALL BE REMOVED WITH ALL ASSOCIATED HARDWARE AND ACCESSORIES COMPLETE BACK TO SOURCE INCLUDING, BUT NOT LIMITED TO: CONDUIT, BOXES, WIRING, CABLES, HANGERS, ETC.
3. IN ALL LOCATIONS WHERE EQUIPMENT AND WIRING IS TO REMAIN, BUT CANNOT BE DISCONNECTED WITHOUT DAMAGING, PROVIDE NEW EQUIPMENT AND HARDWARE AS REQUIRED, TO ENSURE PROPER OPERATIONS.
4. IN ALL SURROUNDING AREAS THAT ARE NOT BEING RENOVATED UNDER THIS CONTRACT, VERIFY THAT ELECTRICAL POWER, LIGHTING, AND SYSTEMS HAVE NOT BEEN AFFECTED BY THE ALTERATIONS. IN LOCATIONS WHERE SYSTEMS ARE AFFECTED, PROVIDE ALL WORK AS REQUIRED TO MAINTAIN PROPER OPERATIONS OF THESE SYSTEMS.
5. THE CONTRACTOR SHALL ARRANGE TO EXECUTE ALL WORK AT SUCH TIMES AND IN SUCH LOCATIONS TO PROVIDE UNINTERRUPTED SERVICES FOR THE BUILDING, OR ANY OF ITS SECTIONS. IF NECESSARY, TEMPORARY WORK SHALL BE INSTALLED TO PROVIDE FOR THIS CONDITION. THE INTENT IS FOR ALL NEW EQUIPMENT TO BE INSTALLED AND READY TO BE ENERGIZED PRIOR TO REMOVAL OF EXISTING EQUIPMENT TO MINIMIZE DOWNTIME TO THE GREATEST EXTENT POSSIBLE. AUTHORIZATION FOR INTERRUPTING SERVICES SHALL BE OBTAINED IN WRITING FROM THE OWNER.

KEYED NOTES:

1. DISCONNECT AND REMOVE ALL CONDUIT AND WIRING TO THE POLYMER FEED PUMP VFD PANEL, INCLUDING ALL CONTROLS CONDUIT AND WIRING FROM FOURNIER CONTROL PANEL, POLYMER FEED DISCONNECTS AND PUMPS.
2. DISCONNECT AND REMOVE ALL CONDUIT AND WIRING TO POLYMER SYSTEM CONTROL PANELS AND ALL ASSOCIATED INSTRUMENTS AND CONTROLS. CUT ALL CONDUITS AT FLOOR LEVEL AND SEAL COMPLETELY.

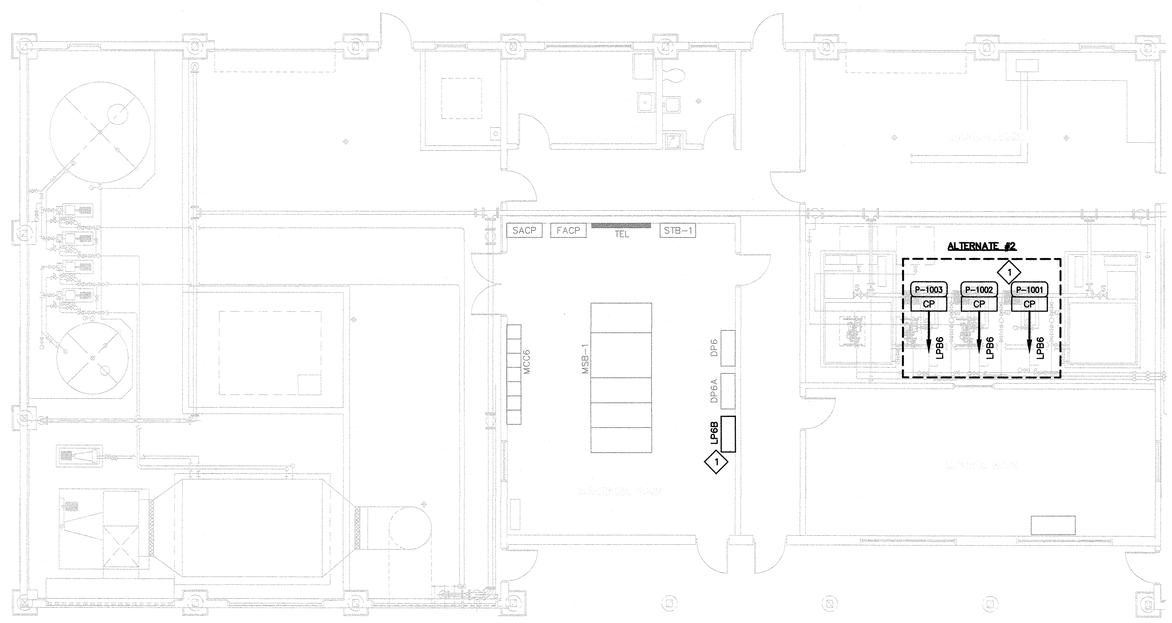

SLUDGE PROCESSING BUILDING POWER PLAN

SCALE: 1/8" = 1'-0"

GENERAL NOTES:

1. REFER TO ONE-LINE DIAGRAM, SHEET E-054 FOR CONDUIT & WIRE SIZES NOT SHOWN THIS SHEET.

KEYED NOTES:

1. POLYMER FEED SYSTEM IS A BID ALTERNATE. FOR EACH POLYMER FEED SYSTEM SKID, PROVIDE (1) 120V CIRCUIT TO CONTROL PANEL AND (1) NEW 20A-1P CIRCUIT BREAKER IN EXISTING PANEL LP6B.

12' 8' 4' 0 8' 16'

BAR SCALE
1/8" = 1'-0"
CHECK GRAPHIC SCALE BEFORE USING

ISSUED FOR BID

980 Washington Street, Suite 325
Dedham, Massachusetts 02026
800.446.5518 | www.woodardcurran.com
WOODARD & CURRAN
COMMITMENT & INTEGRITY DRIVE RESULTS

THIS DOCUMENT IS THE PROPERTY OF WOODARD & CURRAN INC. AND ITS CLIENT. REPRODUCTION OR MODIFICATION WITHOUT WRITTEN PERMISSION IS PROHIBITED.

COMMONWEALTH OF MASSACHUSETTS
ANDREW J. PATRICK
ELECTRICAL
NO. 30751
REGISTERED PROFESSIONAL ENGINEER
2016-OCT-27

REV	DESCRIPTION	DATE

DESIGNED BY: GW
DRAWN BY: PO
CHECKED BY: AJP
229123-E-401.dwg

SOLIDS PROCESSING BUILDING DEMOLITION & POWER PLANS

DEPARTMENT OF PUBLIC WORKS
NANTUCKET, MASSACHUSETTS

SURFSIDE WASTEWATER TREATMENT FACILITY UPGRADES

JOB NO.: 229123.00
DATE: SEPTEMBER 2016
SCALE: AS NOTED
SHEET: 97 OF 116

E-401

\\woodardcurran.net\shared\Projects\229123 Nantucket MA Surfside WWTF Upgrades 2015-2016\wip\Drawings\Electrical\229123-E-401.dwg, Sep 20, 2016 - 3:01pm

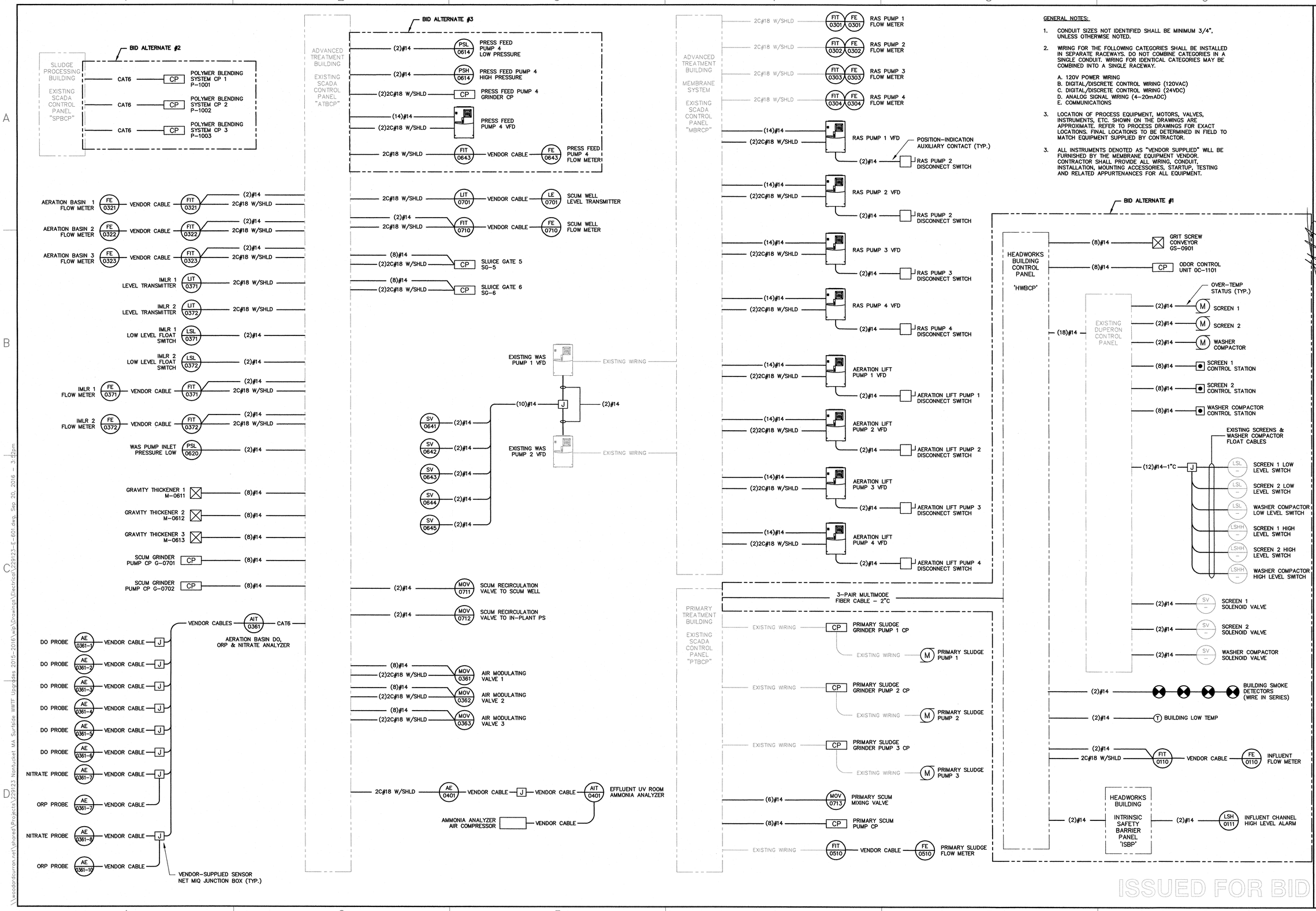

22x34 SHEET
1:1

980 Washington Street, Suite 325
Dedham, Massachusetts 02026
800.446.5518 | www.woodardcurran.com

WOODARD & CURRAN

COMMITMENT & INTEGRITY DRIVE RESULTS

THIS DOCUMENT IS THE PROPERTY OF WOODARD & CURRAN INC. AND ITS CLIENT. REPRODUCTION OR MODIFICATION WITHOUT WRITTEN PERMISSION IS PROHIBITED.

COMMONWEALTH OF MASSACHUSETTS
ANDREW J. FITZPATRICK
ELECTRICAL
NO. 50751
REGISTERED PROFESSIONAL ENGINEER
2.21.C.09.23

REV	DESCRIPTION	DATE

DESIGNED BY: GW | CHECKED BY: AJF
DRAWN BY: PO | 229123-E-601.dwg

INSTRUMENTATION & CONTROL RISER DIAGRAM

DEPARTMENT OF PUBLIC WORKS
NANTUCKET, MASSACHUSETTS

SURFSIDE WASTEWATER TREATMENT FACILITY UPGRADES

JOB NO.: 229123.00
DATE: SEPTEMBER 2016
SCALE: XXX
SHEET: 98 OF 116

E-601

\\woodardcurran.net\shared\Projects\229123 Nantucket MA Surfside WWTF Upgrades 2015-2016\wip\Drawings\Electrical\229123-E-601.dwg, Sep 20, 2016 - 3:42pm

22x34 SHEET
1:1

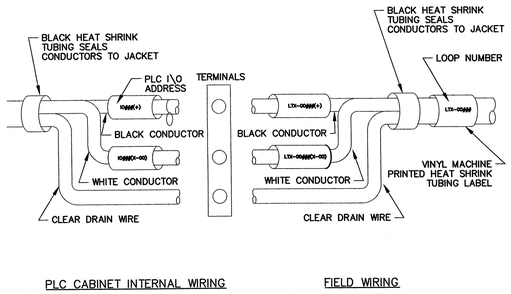

WIRING TERMINATION DETAIL

SCALE: N.T.S.

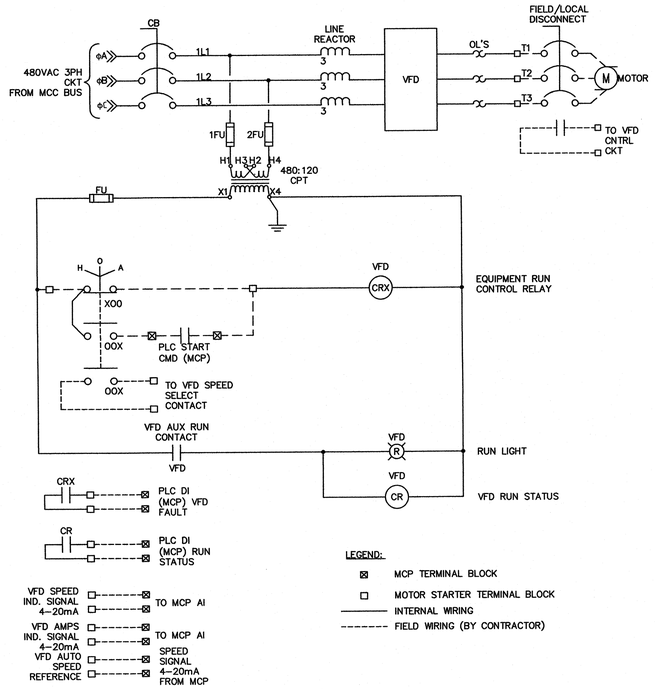

ROTARY PRESS FEED PUMP VFD WIRING DIAGRAM (ALTERNATE #3)

SCALE: N.T.S.

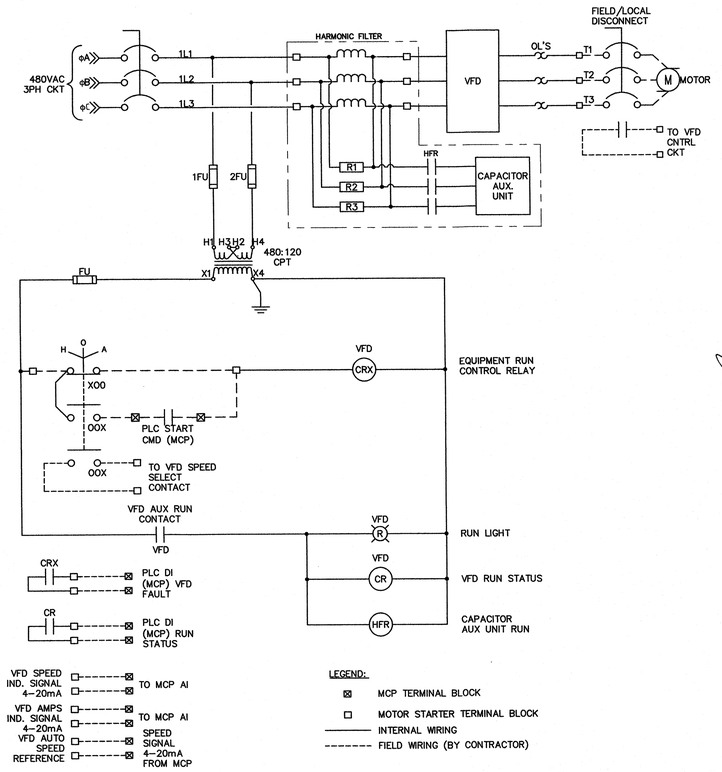

AERATION LIFT & RAS PUMP VFD WIRING DIAGRAM

SCALE: N.T.S.

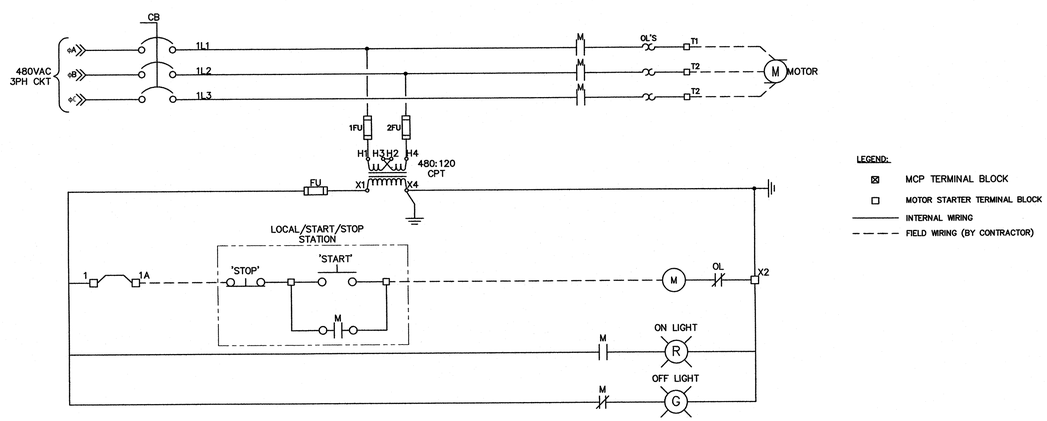

MOTOR STARTER WIRING DIAGRAM WITH LOCAL CONTROL STATION

SCALE: N.T.S.

ISSUED FOR BID

980 Washington Street, Suite 325
Dedham, Massachusetts 02026
800.446.5518 | www.woodardcurran.com
COMMITMENT & INTEGRITY DRIVE RESULTS
WOODARD & CURRAN

THIS DOCUMENT IS THE PROPERTY OF WOODARD & CURRAN INC. AND ITS CLIENT. REPRODUCTION OR MODIFICATION WITHOUT WRITTEN PERMISSION IS PROHIBITED.

COMMONWEALTH OF MASSACHUSETTS
ANDREW FITZPATRICK ELECTRICAL NO. 50751
REGISTERED PROFESSIONAL ENGINEER
7/21/17

REV	DESCRIPTION	DATE

DESIGNED BY: GW
DRAWN BY: PO
CHECKED BY: AJF
229123-E-701.dwg

WIRING DIAGRAMS - SHEET 1

DEPARTMENT OF PUBLIC WORKS
NANTUCKET, MASSACHUSETTS

SURFSIDE WASTEWATER TREATMENT FACILITY UPGRADES

JOB NO.: 229123.00
DATE: SEPTEMBER 2016
SCALE: XXX
SHEET: 99 OF 116

E-701

\\woodardcurran.net\shares\Projects\229123 Nantucket MA Surfside WWTF Upgrades 2015-2018\wip\Drawings\Electrical\229123-E-701.dwg, Sep 20, 2016 - 3:12pm

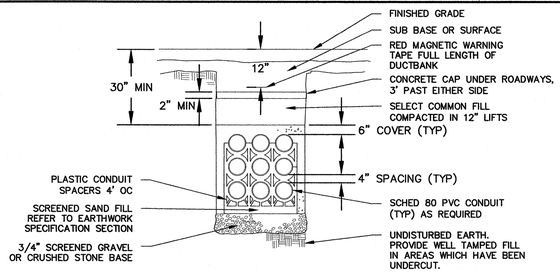

TYPICAL SAND-ENCASED/CONCRETE CAPPED UNDERGROUND DUCT BANK DETAIL

NOTE:
ALL WORK ASSOCIATED WITH THE HEADWORKS BUILDING (DUCTBANK A & B) IS PART OF BID ALTERNATE #1.

SITE DUCTBANK NOTES:

1. SEE TYPICAL DUCTBANK SECTION DETAILS (THIS SHEET) FOR DUCTBANK REQUIREMENTS.
2. PROVIDE MINIMUM 1'-0" SPACING WITHIN DUCTBANK BETWEEN POWER AND CONTROL/COMMUNICATIONS CONDUITS.
3. QUANTITY OF DUCTS SHOWN IN DETAILS ARE SHOWN DIAGRAMMATICALLY ONLY TO IDENTIFY GENERAL CONSTRUCTION AND SPACING REQUIREMENTS. QUANTITY AND SIZE OF CONDUITS SHALL BE AS IDENTIFIED IN THE DUCTBANK SCHEDULE.
4. INSTALL A BARE STRANDED COPPER GROUND CABLE IN EACH DUCT BANK ENVELOPE. MAKE GROUND ELECTRICALLY CONTINUOUS THROUGH THE ENTIRE DUCT BANK SYSTEM. CONNECT GROUND CABLE TO BUILDING AND STATION GROUND GRID OR TO EQUIPMENT GROUND BUSES. IN ADDITION, CONNECT GROUND CABLE TO STEEL CONDUIT EXTENSIONS OF THE UNDERGROUND DUCT SYSTEM, MANHOLES AND HANDHOLES. PROVIDE GROUND CLAMP AND BONDING OF EACH STEEL CONDUIT EXTENSION, WHERE NECESSARY TO MAINTAIN CONTINUITY OF THE GROUND SYSTEM.

DUCTBANK SCHEDULE

DUCTBANK	USE	SIZE	FROM	TO	DESCRIPTION	NOTES
A	POWER	2 1/2"	PRIMARY TREATMENT ELEC RM	HEADWORKS ELEC RM	HEADWORKS BUILDING FEEDER	
	POWER	3"	PRIMARY TREATMENT ELEC RM	HEADWORKS ELEC RM	SPARE	
	COMMUNICATIONS	2"	EXISTING PTBCP	NEW HWBCP	HEADWORKS BUILDING FIBER FEEDER	
	COMMUNICATIONS	3"	EXISTING PTBCP	NEW HWBCP	SPARE	
	COMMUNICATIONS	2"	EXISTING PTBCP	HEADWORKS ELEC RM	HEADWORKS BUILDING CAMERA FIBER FEEDER	
	COMMUNICATIONS	3"	PRIMARY TREATMENT ELEC RM	HEADWORKS ELEC RM	SPARE	
B	POWER	2 1/2"	PRIMARY TREATMENT ELEC RM	HEADWORKS ELEC RM	HEADWORKS BUILDING FEEDER	
	POWER	3"	PRIMARY TREATMENT ELEC RM	HEADWORKS ELEC RM	SPARE	
	POWER	1"	HEADWORKS ELEC RM	ODOR CONTROL FAN CP	ODOR CONTROL FAN FEEDER	
	POWER	1"	HEADWORKS ELEC RM	ODOR CONTROL FAN AREA	SPARE	
	COMMUNICATIONS	2"	EXISTING PTBCP	NEW HWBCP	HEADWORKS BUILDING FIBER FEEDER	
	COMMUNICATIONS	2"	EXISTING PTBCP	NEW HWBCP	SPARE	
	COMMUNICATIONS	2"	EXISTING PTBCP	HEADWORKS ELEC RM	HEADWORKS BUILDING CAMERA FIBER FEEDER	
	COMMUNICATIONS	3"	PRIMARY TREATMENT ELEC RM	HEADWORKS ELEC RM	SPARE	
C	POWER	1"	EXISTING MCC4	PRIMARY SCUM PUMP	PRIMARY SCUM PUMP FEEDER	
	CONTROLS	1"	EXISTING PTBCP	PRIMARY SCUM PUMP CP	PRIMARY SCUM PUMP CP CONTROLS	
	POWER	1"	EXISTING PTBCP	PRIMARY SCUM PUMP AREA	SPARE	

NOTES:

1. INSPECTION WELLS IN ROADWAYS SHALL ADHERE TO AASHTO H20 LOADING REQUIREMENTS.
2. WELLS SHALL BE FLUSH TYPE PRECAST CONCRETE, OR POLYMER CONCRETE PER AREA OF INSTALLATION. PROVIDE BOLTED DOWN COVERS WITH DESCRIPTION "GROUND ROD". PROVIDE STEEL COVERS FOR WELLS IN TRAFFIC AREAS.

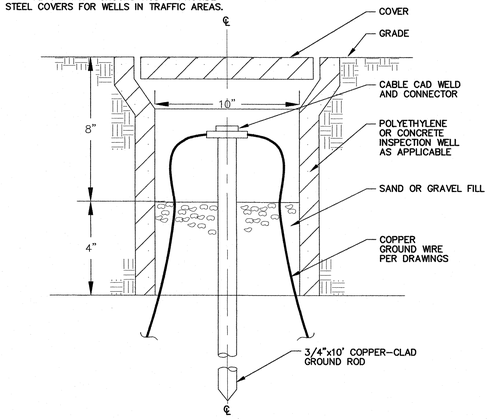

1 / E-002 TYPICAL GROUNDING WELL DETAIL

SCALE: N.T.S.

NOTES:

APPLICABLE FOR ALL IN-SLAB AREAS UNLESS NOTED OTHERWISE.

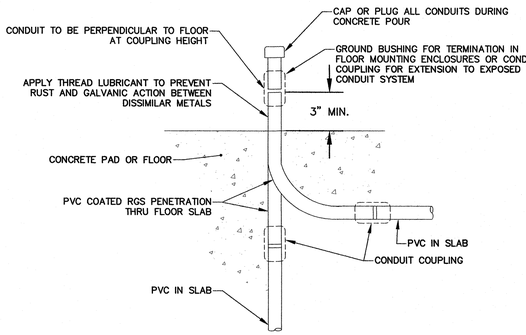

2 / TYP. TYPICAL IN-SLAB CONDUIT STUB-UP DETAIL

SCALE: N.T.S.

NOTES:

APPLICABLE FOR ALL UNDERGROUND AREAS UNLESS NOTED OTHERWISE.

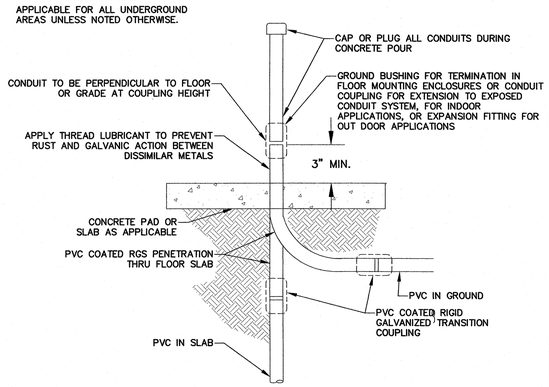

3 / TYP. TYPICAL UNDERGROUND CONDUIT STUB-UP DETAIL

SCALE: N.T.S.

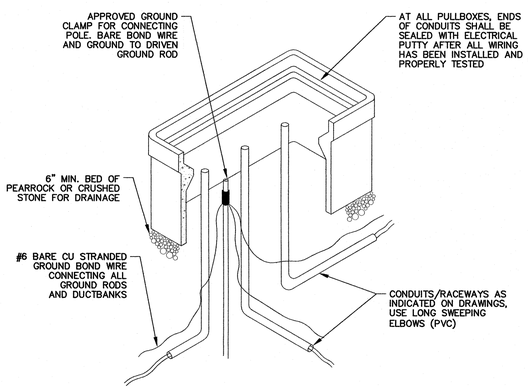

NOTES:

1. FINAL DIMENSIONS OF PULL BOXES SHALL BE AS VERIFIED IN THE FIELD AND SHALL BE IN ACCORDANCE WITH NEC.
2. THE PULL/SPLICE BOX UNDERGROUND ENCLOSURES SHALL BE CONSTRUCTED OF POLYMER CONCRETE CONSISTING OF SAND AND AGGREGATE BOUND TOGETHER WITH A POLYMER RESIN. INTERNAL REINFORCEMENT MAY BE PROVIDED BY MEANS OF STEEL, FIBERGLASS, OR A COMBINATION OF THE TWO. HANDHOLES FOR INSTALLATION IN ROADWAYS SHALL CONCRETE REINFORCED H20 TRAFFIC RATED.
3. PULLBOXES SHALL BE PRECAST EQUAL TO: STRONGWELL QUAZITE, OLD CASTLE PRECAST, COLONIAL TEL TEK OR APPROVED EQUAL.
4. COVERS SHALL HAVE MOLDED LETTERING, ELECTRIC OR COMM AS APPLICABLE.

4 / E-002 PULLBOX/ HANDHOLE DETAIL

SCALE: N.T.S.

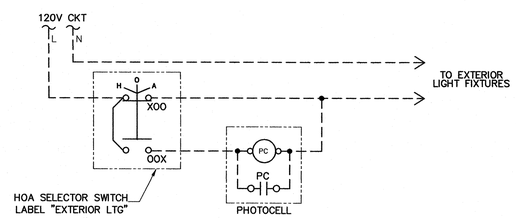

5 / E-102 EXTERIOR LIGHTING WIRING DIAGRAM

SCALE: N.T.S.

ISSUED FOR BID

980 Washington Street, Suite 325
Dedham, Massachusetts 02026
800.446.5518 | www.woodardcurran.com

COMMITMENT & INTEGRITY DRIVE RESULTS

WOODARD & CURRAN

THIS DOCUMENT IS THE PROPERTY OF WOODARD & CURRAN INC. AND ITS CLIENT. REPRODUCTION OR MODIFICATION WITHOUT WRITTEN PERMISSION IS PROHIBITED.

COMMONWEALTH OF MASSACHUSETTS — ANDREW FITZGERALD — ELECTRICAL — NO. 50161 — REGISTERED PROFESSIONAL ENGINEER — 09-26-2016

REV	DESCRIPTION	DATE

DESIGNED BY: GW | CHECKED BY: AJF
DRAWN BY: PO | 229123-E-801.dwg

ELECTRICAL DETAILS SHEET 1

DEPARTMENT OF PUBLIC WORKS NANTUCKET, MASSACHUSETTS

SURFSIDE WASTEWATER TREATMENT FACILITY UPGRADES

JOB NO.: 229123.00
DATE: SEPTEMBER 2016
SCALE: AS NOTED
SHEET: 100 OF 116

E-801

22x34 SHEET 1:1

\\woodardcurran.net\shared\Projects\229123 Nantucket MA Surfside WWTF Upgrades 2015-2016\wip\Drawings\Electrical\229123-E-801.dwg, Sep 20, 2016 - 3:43pm

22x34 SHEET
1:1

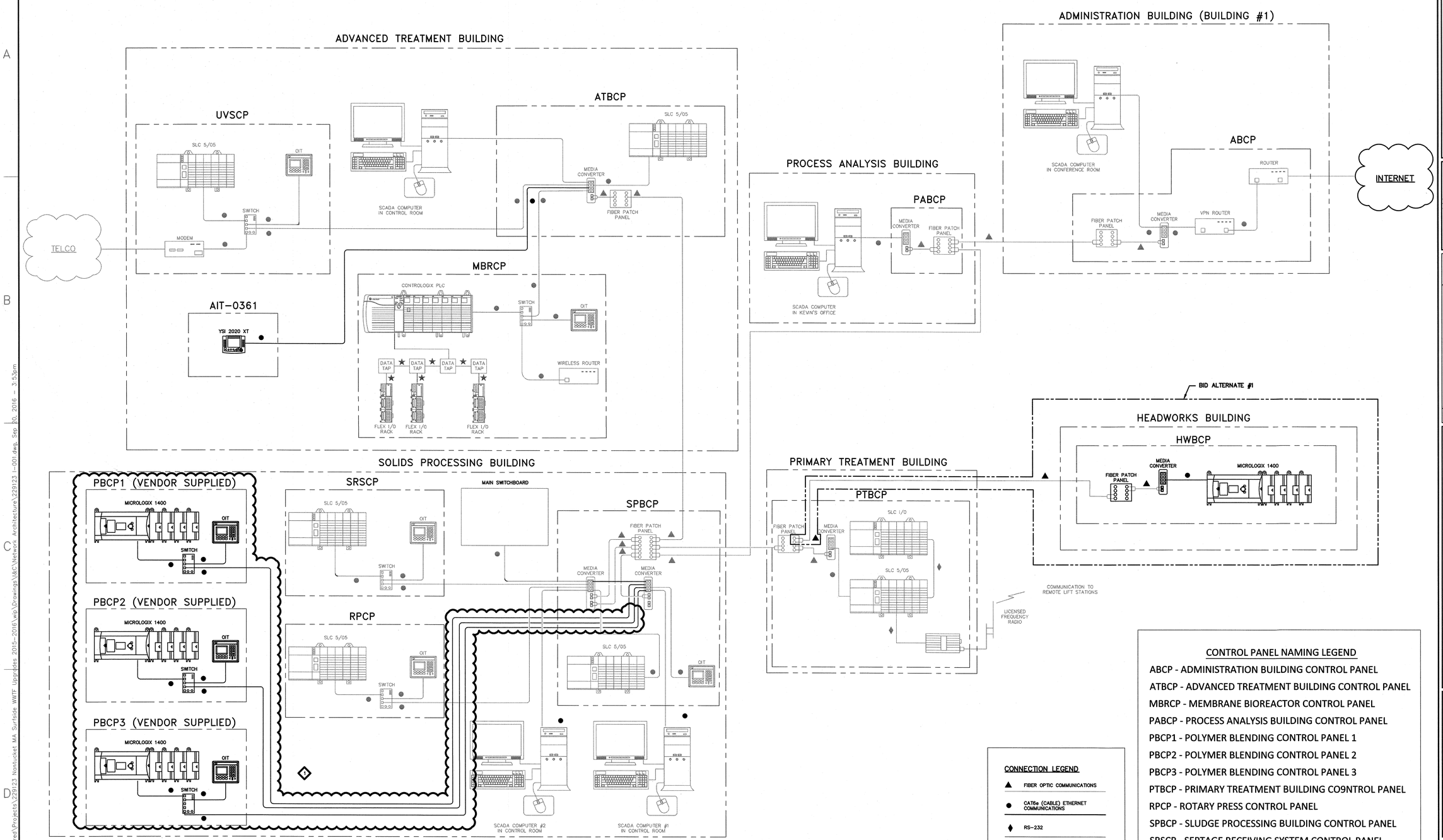

CONTROL PANEL NAMING LEGEND

ABCP - ADMINISTRATION BUILDING CONTROL PANEL
ATBCP - ADVANCED TREATMENT BUILDING CONTROL PANEL
MBRCP - MEMBRANE BIOREACTOR CONTROL PANEL
PABCP - PROCESS ANALYSIS BUILDING CONTROL PANEL
PBCP1 - POLYMER BLENDING CONTROL PANEL 1
PBCP2 - POLYMER BLENDING CONTROL PANEL 2
PBCP3 - POLYMER BLENDING CONTROL PANEL 3
PTBCP - PRIMARY TREATMENT BUILDING CO9NTROL PANEL
RPCP - ROTARY PRESS CONTROL PANEL
SPBCP - SLUDGE PROCESSING BUILDING CONTROL PANEL
SRSCP - SEPTAGE RECEIVING SYSTEM CONTROL PANEL
HWBCP - HEADWORKS BUILDING CONTROL PANEL

CONNECTION LEGEND

- ▲ FIBER OPTIC COMMUNICATIONS
- ● CAT6e (CABLE) ETHERNET COMMUNICATIONS
- ♦ RS-232
- ★ CONTROLNET

NOTES:

1. HEADWORKS BUILDING WORK IS PART OF BID ALTERNATE #1.
2. POLYMER BLENDING SYSTEM IS PART OF BID ALTERNATE #2.

ISSUED FOR BID

980 Washington Street, Suite 325
Dedham, Massachusetts 02026
800.446.5516 | www.woodardcurran.com
WOODARD & CURRAN
COMMITMENT & INTEGRITY DRIVE RESULTS

THIS DOCUMENT IS THE PROPERTY OF WOODARD & CURRAN, INC. AND ITS CLIENT. REPRODUCTION OR MODIFICATION WITHOUT WRITTEN PERMISSION IS PROHIBITED.

COMMONWEALTH OF MASSACHUSETTS
JOVATION H. ALVARADO
CONTROL SYSTEM
No. 38808
REGISTERED PROFESSIONAL ENGINEER
9-23-16

REV	DESCRIPTION	DATE

DESIGNED BY: JHG | CHECKED BY: JHG
DRAWN BY: PQ | 229123 I-001.dwg

SURFSIDE WWTF NETWORK ARCHITECTURE

DEPARTMENT OF PUBLIC WORKS
NANTUCKET, MASSACHUSETTS

SURFSIDE WASTEWATER TREATMENT FACILITY UPGRADES

JOB NO.: 229123.00
DATE: SEPTEMBER 2016
SCALE: AS NOTED
SHEET: 101 OF 116

I-001

\\woodardcurran.net\shared\Projects\229123 Nantucket MA Surfside WWTF Upgrades 2015-2016\wip\Drawings\I&C\Network Architecture\229123 I-001.dwg, Sep 20, 2016 - 3:53pm

22x34 SHEET
1:1

ELECTRICAL SYMBOLS

	LIMIT SWITCH NORMALLY CLOSED
	LIMIT SWITCH HELD CLOSED
	LIMIT SWITCH NORMALLY OPEN
	LIMIT SWITCH HELD OPEN
	FLOAT SWITCH NORMALLY OPEN
	PRESSURE SWITCH NORMALLY OPEN
	TEMPERATURE SWITCH NORMALLY OPEN
	TIME SWITCH (DROP OUT) NORMALLY OPEN
	TIME SWITCH (PULL IN) NORMALLY OPEN
	FLOW SWITCH NORMALLY OPEN
	PUSH BUTTON NORMALLY CLOSED
	PUSH BUTTON NORMALLY OPEN
OFF ON OX	SELECTOR SWITCH 2 POSITION
H O A XOO OOX	SELECTOR SWITCH 3 POSITION
H L O A XOOO OXOO OOOX	SELECTOR SWITCH 4 POSITION
	CONTACT NORMALLY CLOSED
	CONTACT NORMALLY OPEN
	SWITCH
R	PILOT LIGHT (W/ LENS COLOR)
	SOLENOID
	COIL
	HORN
	CIRCUIT BREAKER
	FUSE
	CHASSIS GROUND
	THERMAL OVERLOAD
	120 VAC RECEPTACLE
	TRANSFORMER

	TRANSFORMER
	CURRENT TRANSFORMER
	THERMOCOUPLE
	RTD SENSOR
	MOTOR
	MUSHROOM PUSH BUTTON NORMALLY OPEN
#	REVISION REFERENCE
#	ITEM REFERENCE
#	NOTE REFERENCE
######	TERMINAL NUMBER
	BREAK
	PANEL WIRING
	FIELD WIRING
	SHIELDED CABLE
	WIRES CROSSING
	WIRES CONNECTING
	3 PHASE HEATER (DELTA)
	3 PHASE HEATER (WYE)
	3-POLE CIRCUIT BREAKER
	MOTOR PROTECTOR
	3-POLE CONTACTOR
	3-POLE DISCONNECT

PANEL NOTES

1) INCLUDE A DRAWING POCKET INSIDE THE PANEL LARGE ENOUGH TO STORE A COMPLETE SET OF SYSTEM DIAGRAMS, AND DRAWINGS.

2) ANALOG CABLES: 2 CONDUCTOR WITH SHIELD. BELDEN #8760 OR EQUAL.

3) LEAVE FREE SPACE ABOVE PLC FOR VENTILATION.

4) IDENTIFY ALL WIRES AS SPECIFIED BY THE NATIONAL ELECTRICAL CODE HANDBOOK AND THE FOLLOWING:

POWER DISTRIBUTION WIRES.....BLACK
NEUTRAL WIRES.....WHITE
AC CONTROL CIRCUIT WIRES.....RED
DC CONTROL CIRCUIT WIRES.....BLUE
DC COMMON WIRES.....WHITE W/BLUE STRIPE
GROUND WIRES.....GREEN W/YELLOW STRIPE
WIRES THAT MAY REMAIN.....ORANGE
ENERGIZED WHEN THE MAIN
DISCONNECT IS IN THE OFF
POSITION

5) SIZE ALL WIRE IN ACCORDANCE WITH NEC CODES. SINGLE CONDUCTORS: STRANDED COPPER WITH THWN INSULATION, RATED FOR 600 VAC, AND UL LISTED AS MTW, UNLESS NOTED OTHERWISE. MINIMUM CONDUCTOR SIZE: #14AWG. #16 AWG MAY BE USED ONLY FOR THE INDIVIDUAL WIRES CONNECTING DIRECTLY TO AN I/O TERMINAL ON THE PLC SWING ARM. THE HOT AND NEUTRAL CONDUCTOR SUPPLYING EACH SWING ARM SHALL REMAIN #14 AWG. GROUND CONDUCTOR SIZE: AS INDICATED ON THE DRAWINGS. WHERE NOT INDICATED, THEY SHALL BE #14 AWG OR LARGER.

6) BOND PLC CHASSIS, PANEL DOORS, SIDE PANELS, BACK PANELS AND GROUND BUS TOGETHER WITH WIRES SIZED AS SHOWN ON THE DRAWING.

7) TAG ALL WIRES AT EVERY TERMINATION POINT. SHORT WIRE LENGTHS, (LESS THAN 8") WHERE THE ENTIRE CONDUCTOR IS VISIBLE MAY BE TAGGED AT JUST ONE END. WIRE LABELS FOR WIRES SMALLER THAN NO. 4. SHALL BE VINYL, SELF ADHESIVE, WRAPAROUND, WITH MACHINE PRINTED NUMBERS AND LETTERS. WIRE SIZES NO. 4 AND LARGER AND MULTI CONDUCTOR CABLES SHALL BE MARKED WITH ONE-PIECE, NYLON LOCKING MACHINE PRINTED MARKER TIES EQUAL TO PANDUIT PLM SERIES. WIRE TAG NUMBER SHALL BE AS INDICATED ON THE DRAWINGS

8) DO NOT ROUTE ANY COMMUNICATION CABLES IN WIREWAYS WITH 120 VAC WIRING. ROUTE ALL THESE CABLES AWAY FROM 120 VAC WIRING. WHERE 120 VAC CONDUCTORS MUST BE CROSSED, DO SO AT RIGHT ANGLES AND PROVIDE AT LEAST 1" SEPARATION.

9) CONNECT NO MORE THAN TWO WIRES TO ANY ONE TERMINAL. PROVIDE TERMINAL BLOCKS WITH A SAFETY COVER OR BE FINGER SAFE TO PROTECT PERSONNEL FROM SHOCK. MOUNT ALL TERMINAL BLOCKS ON DIN RAILS. SUPPLY ALL HARDWARE NEEDED TO PROVIDE A COMPLETE TERMINAL STRIP ASSEMBLY, INCLUDING BUT NOT LIMITED TO: MISCELLANEOUS SEPARATORS, TOP JUMPER BARS, SIDE JUMPER BARS, MACHINE PRINTED TERMINAL BLOCK TAGS, FASTENERS, BRACKETS FOR RAISING 35MM RAIL, ETC

10) RAISE ALL TERMINAL STRIPS SET BETWEEN WIREWAYS TO FACILITATE WIRING. INSTALL END BARRIERS FOR EACH STYLE OF TERMINAL. INSTALL END STOPS ON EACH SECTION OF TERMINALS OR RELAYS. USE MACHINE PRINTED TAGS TO MARK TERMINAL STRIPS. WHEREVER POSSIBLE, MAKE ALL TERMINAL BLOCK CONNECTIONS FOR THE PANEL WIRING ON THE TOP OR RIGHT SIDE OF THE TERMINAL STRIP AND LEAVE THE BOTTOM OR LEFT SIDE FREE FOR FIELD TERMINATIONS, UNLESS NOTED OTHERWISE.

11) PROVIDE ENGRAVED PLASTIC NAMEPLATES. EITHER PAINT FILLED ENGRAVINGS OR 2 COLOR LAMINATIONS ARE ACCEPTABLE.

12) ALL OPERATOR CONTROL DEVICES (BUTTONS, SWITCHES, METERS, DISPLAYS, ETC.) SHALL HAVE NAMEPLATES.

13) PROVIDE A SET OF AS-BUILT DRAWINGS WITH THE PANEL. THESE SHALL BE COMPLETE, ALLOWING ENGINEER TO PRODUCE A SET OF "RECORD" DRAWINGS SHOWING ALL WIRE NUMBERS WITHIN THE PANEL AND THE DEVICE TERMINAL NUMBERS TO WHICH THEY CONNECT. REQUIRED INFORMATION SHALL INCLUDE BUT NOT BE LIMITED TO:
   A. ALL WIRE TAG NUMBERS.
   B. TERMINAL CONNECTION POINTS FOR POWER AND NEUTRAL FEEDS.
   C. ANY DEVIATIONS FROM THE EQUIPMENT LOCATIONS SHOWN ON THE DRAWINGS. PRIOR APPROVAL SHOULD BE OBTAINED BEFORE MAKING SUCH CHANGES.

14) SAVE ALL MATERIAL DATA SHEETS AND LITERATURE. WHERE PRODUCT DATA IS PROVIDED ON THE PACKAGE, MAKE A CLEAR COPY OF THE DATA AND INCLUDE WITH OTHER DATA SHEETS. INCLUDE ALL THIS MATERIAL WITH THE PANEL DURING DELIVERY.

15) EQUIPMENT LOCATIONS SHALL BE AS SHOWN ON THE DRAWINGS. THE PANEL BUILDER SHALL NOTIFY ENGINEER OF ANY PHYSICAL CONFLICTS OR OTHER PROBLEMS THAT COULD CAUSE PROBLEMS WITH THE INSTALLATION OR OPERATION OF THE PANEL BEFORE ASSEMBLING THE PANEL. RESOLUTION OF SUCH CONFLICTS SHALL BE APPROVED BY ENGINEER PRIOR TO PANEL ASSEMBLY.

16) PROVIDE ALL EQUIPMENT AS SHOWN ON THE BILL OF MATERIALS INCLUDED IN THIS DRAWING PACKAGE. SUBMIT ANY DEVIATION FROM THE BILL OF MATERIALS FOR APPROVAL IN WRITING PRIOR TO FABRICATION.

MISCELLANEOUS SYMBOLS

BA / A — BID-ALTERNATE; BID-ALTERNATE CALL OUT; BID-ALTERNATE # OR LETTER

DETAIL TITLE — 1 / X-0X — DETAIL CALL OUT

B / 80.01 — DETAIL #; SECTION CALL OUT; SHEET #

FIELD NOTES

1) TAKE CARE WHEN CONDUIT ENTRY PENETRATIONS ARE MADE INTO ENCLOSURE TO PREVENT SCATTERING OF DRILL CHIPS & KNOCK-OUT SLUGS. DE-BUR PENETRATIONS AND REMOVE DEBRIS. SEAL ALL CONDUIT ENTRIES INTO ENCLOSURE FROM LIQUIDS & CONTAMINANTS. AVOID CONDUIT ENTRIES OVER CRITICAL COMPONENTS, SUCH AS PLCs AND DRIVES.

2) ANALOG CABLES: 2 CONDUCTOR WITH SHIELD. BELDEN #8760 OR EQUAL.

3) IDENTIFY ALL WIRES AS SPECIFIED BY THE NATIONAL ELECTRICAL CODE HANDBOOK AND THE FOLLOWING:

460 VAC	120/208 VAC
(L1).....BROWN (L2).....ORANGE (L3).....YELLOW (NEUT)....GREY	(L1).....BLACK (L2).....RED (L3).....BLUE (NEUT)....WHITE
24 VDC	**INTRINSICALLY SAFE**
(ALL).....BLUE	(ALL).....LIGHT BLUE

4) SIZE ALL WIRES IN ACCORDANCE WITH NEC CODES. SINGLE CONDUCTORS SHALL BE STRANDED COPPER WITH THWN INSULATION, RATED FOR 600 VAC, AND UL LISTED AS MTW, UNLESS NOTED OTHERWISE. MINIMUM CONDUCTOR SIZE SHALL BE #14 AWG. GROUND CONDUCTOR SIZE SHALL BE AS INDICATED ON THE DRAWINGS. WHERE NOT INDICATED, IT SHALL BE #14 AWG OR LARGER.

5) LOCATE CONDUIT ENTRIES INTO ENCLOSURES TO ASSURE ADEQUATE WIRE BENDING SPACE. ROUTE WIRING SO THAT DOOR MOUNTED EQUIPMENT WILL NOT INTERFERE WITH IT WHEN THE DOOR IS CLOSED.

6) LOCATE INTRINSICALLY SAFE WIRING CONDUIT ENTRIES INTO ENCLOSURE AS CLOSE AS POSSIBLE TO THE WIREWAY PROVIDED FOR INTRINSICALLY SAFE FIELD WIRING SO THAT ALL INTRINSIC WIRING IS ISOLATED (AT LEASED 2") FROM ALL OTHER FIELD AND PANEL WIRING AND SECURED. ROUTE INTRINSICALLY SAFE FIELD WIRING THROUGH THE WIREWAY PROVIDED EXCLUSIVELY FOR INTRINSICALLY SAFE WIRING. ALL WIRING SHALL BE IN COMPLIANCE WITH THE NATIONAL ELECTRICAL CODE ARTICLE 504. OTHER APPLICABLE ARTICLES INCLUDE 501 & 515.

7) ENGINEER HAS IDENTIFIED AS MANY OF THE PLC INPUTS AND OUTPUTS AS POSSIBLE THAT WILL BE NEEDED TO MAKE THE CONTROL PROGRAM OPERATE AS REQUIRED. ADDITIONAL I/O MAY BE IDENTIFIED WHEN THE CONTROL PROGRAM IS WRITTEN AND REQUIRE WIRING. THESE SHALL BE CONSIDERED PART OF THESE SHOP DRAWINGS. THE INSTALLING CONTRACTOR SHALL INSTALL 10% SPARE CONDUCTORS TERMINATED ON TERMINAL BLOCKS ON BOTH ENDS TO MEET ADDITIONAL I/O REQUIREMENTS.

8) TAG ALL WIRES AT EVERY TERMINATION POINT. SHORT WIRE LENGTHS, (LESS THAN 8") WHERE THE ENTIRE CONDUCTOR IS VISIBLE MAY BE TAGGED AT JUST ONE END. WIRE LABELS FOR WIRES SMALLER THAN NO. 4. SHALL BE VINYL, SELF ADHESIVE, WRAPAROUND, WITH MACHINE PRINTED NUMBERS AND LETTERS. WIRE SIZES NO. 4 AND LARGER AND MULTI CONDUCTOR CABLES SHALL BE MARKED WITH ONE-PIECE, NYLON LOCKING MACHINE PRINTED MARKER TIES EQUAL TO PANDUIT PLM SERIES. WIRE TAG NUMBER SHALL BE AS INDICATED ON THE DRAWINGS.

9) DO NOT ROUTE ANY COMMUNICATION CABLES IN WIREWAYS WITH 120 VAC WIRING. ROUTE ALL THESE CABLES AWAY FROM 120 VAC WIRING. WHERE 120 VAC CONDUCTORS MUST BE CROSSED, DO SO AT RIGHT ANGLES AND PROVIDE AT LEAST 1" SEPARATION.

10) DO NOT CONNECT MORE THAN TWO WIRES TO ANY ONE TERMINAL.

ISSUED FOR BID

980 Washington Street, Suite 325
Dedham, Massachusetts 02026
800.446.5518 | www.woodardcurran.com
WOODARD & CURRAN
COMMITMENT & INTEGRITY DRIVE RESULTS

THIS DOCUMENT IS THE PROPERTY OF WOODARD & CURRAN INC. AND ITS CLIENT. REPRODUCTION OR MODIFICATION WITHOUT WRITTEN PERMISSION IS PROHIBITED.

COMMONWEALTH OF MASSACHUSETTS — MICHAEL J. CARVALHO — INFORMATION & COMMUNICATIONS TECHNOLOGY — REGISTERED PROFESSIONAL ENGINEER — 9-23-16

REV	DESCRIPTION	DATE

DESIGNED BY: PS | CHECKED BY: JHG
DRAWN BY: RPM | 229123.00-I002.dwg

CONTROL PANEL HWBCP
LEGEND & NOTES

DEPARTMENT OF PUBLIC WORKS
NANTUCKET, MASSACHUSETTS

SURFSIDE WASTEWATER
TREATMENT FACILITY
UPGRADES

JOB NO.: 229123.00
DATE: SEPTEMBER 2016
SCALE: AS-NOTED
SHEET: 102 OF 116

I-002

\\woodardcurran.net\shared\Projects\229123 Nantucket MA Surfside WWTF Upgrades 2015-2016\wip\Drawings\I&C\Legend & Notes\229123-I002.dwg, Sep 20, 2016 - 3:54pm

22x34 SHEET 1:1

THIS AREA INTENTIONALLY LEFT BLANK

BILL OF MATERIAL

ITEM	QTY.	MANUFACTURER	PART NUMBER	DESCRIPTION	DESIGNATION
				****ENCLOSURE & RELATED EQUIPMENT****	
1	1	HOFFMAN	CSD363012LG	ENCLOSURE, NEMA 4 PAINTED STEEL, 36.00" x 30.00" x 12.00"	ENCLOSURE
2	1	HOFFMAN	CP3630	BACK PANEL, 34.25" x 28.25"	SUB PANEL
3	1	HOFFMAN	CWHPTO	ENCLOSURE DOOR HANDLE WITH PADLOCK PROVISION	
4	1	HOFFMAN	CMTGFT	WALL MOUNTING BRACKET KIT	
5					
6					
7					
8					
9					
10					
11					
12					
13					
14					
15					
16					
17					
18					
				****PLC & RELATED EQUIPMENT****	
19	1	ALLEN BRADLEY	1766-L32BXB	MICROLOGIX 1400 PLC, 24VDC	PLC
20	1	ALLEN BRADLEY	1766-MM1	MICROLOGIX PLC MEMORY MODULE	PLC
21	1	ALLEN BRADLEY	1762-IQ16	DIGITAL INPUT MODULE, 16 PT.	PLC, SLOT 1
22	1	ALLEN BRADLEY	1762-IF4	ANALOG INPUT MODULE, 4 CH.	PLC, SLOT 2
23					
24					
25					
26					
27					
28					
29					
30					
31					
32					
33					
				****OPERATOR INTERFACE EQUIPMENT****	
36	1	EATON	M22-RJ45-SA	EXTERNAL ETHERNET INTERFACE PORT	ETHERNET INTERFACE PORT
37					
38					
39					
40					
41					
42					
43					
44					
45					
46					
47					
				****TERMINAL BLOCKS & RELATED EQUIPMENT****	
50	58	ALLEN BRADLEY	1492-JD3	TERMINAL BLOCK 2 TIER	TB1, TB2
51	14	ALLEN BRADLEY	1492-EBJD3	TERMINAL BLOCK END BARRIER, 2 TIER	TB1, TB2
52	6	ALLEN BRADLEY	1492-EAJ35	TERMINAL BLOCK END ANCHOR	PLC, TB1, TB2
53	3	ALLEN BRADLEY	1492-CJJ5-10	2-TIER TERMINAL BLOCK JUMPER, 10 POLE	TB1
54	9	ALLEN BRADLEY	1492-JG3	TERMINAL BLOCK, GROUNDING	TB2
55	1	ALLEN BRADLEY	199-DR1	DIN RAIL, STANDARD, 1 METER	MISC. COMPONENT MOUNTING
56	2	ALLEN BRADLEY	1492-DR6	DIN RAIL, RAISED, 1 METER	TB1, TB2
57	5	ALLEN BRADLEY	1492-JD3FB120	FUSED TERMINAL BLOCK, WITH INDICATOR, 120VAC	FU1-FU5
58	12	ALLEN BRADLEY	1492-JD3FB24	FUSED TERMINAL BLOCK, WITH INDICATOR, 24VDC	FU6-FU17
59	4	ALLEN BRADLEY	1492-SJ8A-4	FUSE BLOCK SIDE JUMPERS 4 POLE	FU1-FU5, FU6-FU17
60	2	ALLEN BRADLEY	1492-EBJD3FB	FUSED TERMINAL BLOCK END BARRIER	FU5, FU17
61	1	ALLEN BRADLEY	1492-M7X12	FUSE BLOCK BLANK MARKING TAGS, 108 CT.	FU1-FU5 FU6-FU17
62	1	ALLEN BRADLEY	1492-H5	FUSED TERMINAL BLOCK, NEON INDICATOR	FU5A
63	1	ALLEN BRADLEY	1492-N37	FUSED TERMINAL BLOCK END BARRIER	FU5A
64	1	ALLEN BRADLEY	1492-MS8X12	FUSE BLOCK BLANK MARKING TAGS, 100 CT.	FU5A
65	4	ALLEN BRADLEY	1492-J4	TERMINAL BLOCK 1 TIER	TB1 (120VAC POWER)
66	2	ALLEN BRADLEY	1492-JG4	TERMINAL BLOCK GROUNDING	TB1 (120VAC POWER)
67	2	ALLEN BRADLEY	1492-EBJ3	TERMINAL BLOCK END BARRIER, 1 TIER	TB1 (120VAC POWER)
68	1	ALLEN BRADLEY	1492-M6X12	TERMINAL BLOCK BLANK MARKING TAGS, 1 TIER, 120 CT.	TB1 (120VAC POWER)
69	2	ALLEN BRADLEY	1492-CJ6-2	1-TIER TERMINAL BLOCK JUMPER, 2 POLE	TB1 (120VAC POWER)
70	1	ALLEN BRADLEY	700-HK36A1-4	RELAY, SPDT, 120VAC COIL	PFR1
71	9	ALLEN BRADLEY	700-HN121	RELAY SOCKET	PFR1, CR1-CR8
72	8	ALLEN BRADLEY	700-HK36Z24-4	RELAY, SPDT, 24VDC COIL	CR1-CR8
73	2	ALLEN BRADLEY	1492-M5X8	TERMINAL BLOCK BLANK MARKING TAGS, 2 TIER, 144 CT.	TB1, TB2
74	15	BUSSMANN	GMA-1-R	FUSE, 1A, 250V, FAST ACTING	FU1, FU4, FU6-FU10, FU13-FU16, PLUS SPARES
75	8	BUSSMANN	GMA-3.15-R	FUSE, 3.15A, 250V, FAST ACTING	FU1, FU3, FU11, FU12, FU17, PLUS SPARES
76	2	BUSSMANN	S505-8-R	FUSE, 8A, 250V, TIME DELAY	FU5, PLUS SPARE
77	2	BUSSMANN	AGC-15	FUSE, 15A, 32V, FAST ACTING	FU5A, PLUS SPARE
78					
79					
80					
81	1	ALLEN BRADLEY	1489-M1C150	CIRCUIT BREAKER, 15 AMP, 1-POLE	CB1
82					
83	2	PHOENIX CONTACT	2859479	VALVETRAB VAL-CP-1S-175, 120VAC SURGE PROTECTOR	SUP1, PLUS 1 SPARE
84	3	PHOENIX CONTACT	2838186	TERMITRAB ANALOG LOOP SURGE PROTECTOR	SUP2, SUP3, PLUS 1 SPARE
85	3	PHOENIX CONTACT	2838995	ANALOG LOOP SURGE PROTECTOR END COVER	SUP2, SUP3, PLUS 1 SPARE
86	1	PHOENIX CONTACT	1051003	ANALOG LOOP SURGE PROTECTOR MARKING STRIP	SUP2, SUP3
87					
88					
89					
				****WIREDUCT****	
93	6FT	PANDUIT	F1X4LG6	WIRING DUCT, 1"W x 4"H	
94	6FT	PANDUIT	C1LG6	WIRING DUCT COVER, 1"W	
95	12FT	PANDUIT	F1.5X4LG6	WIRING DUCT , 1.5"W X 4"H	
96	12FT	PANDUIT	C1.5LG6	WIRING DUCT COVER, 1.5"W	
97					
98					

ITEM	QTY.	MANUFACTURER	PART NUMBER	DESCRIPTION	DESIGNATION
				****WIREDUCT (CONT.)****	
99					
100					
101					
102					
103					
104					
				****HIGH VOLTAGE RELATED EQUIPMENT****	
108					
109					
110					
111					
112					
113					
114					
115					
116					
117					
118					
119					
120					
121					
122					
123					
124					
125					
126					
127					
128					
129					
				****POWER SUPPLIES****	
138	1	ALLEN BRADLEY	1606-XLE240EN	DUAL OUTPUT POWER SUPPLY	PWS1
139	1	ALLEN BRADLEY	1606-XLS240-UPS	DC UPS MODULE	UPSM
140	1	POWERSONIC	PS-12180NB	SEALED RECHARGEABLE LEAD-ACID BATTERY, 12V, 18.0AH	
141					
142					
143					
144					
145					
				****COMMUNICATIONS****	
146					
147	1	CABLESPLUS USA	791414OM1D003MR3	FIBER PATCH CABLE, DUPLEX SC MULTIMODE, 62.5/125, 3 METER	
148	1	CABLES PLUS USA	AP-VAAW0B	12-FIBER FIBER OPTIC ADAPTER PANEL, ST CONNECTORS	
149	1	CABLES PLUS USA	WAC-1X	FIBER PATCH PANEL	
150					
151	1	MOXA	EDS-405A-MM-ST	ETHERNET SWITCH, MANAGED, 3 COPPER / 2 FIBER TYPE ST PORTS	
152	1	BLACK BOX	EVNSL641-0003	CAT6 ETHERNET STANDARD PATCH CORD LENGTH 3 FT.	SEE COMMUNICATIONS
153	1	BLACK BOX	EVNSL641-0007	CAT6 ETHERNET STANDARD PATCH CORD LENGTH 7 FT.	SEE COMMUNICATIONS
154					
155					
156					
157					
158					
159					
160					
161					
162					
				****MISCELLANEOUS PANEL EQUIPMENT****	
164	1	PANDUIT	UGB2-0-414-6	GROUND BAR	
165					
166	2	PANEL FABRICATOR		NAMEPLATE, PHENOLIC, ENGRAVED	SEE SCHEDULE ON EQUIPMENT LAYOUT
167					
168					
169					
170					
171					
172					
173					
174					
175	1	EMEDCO	QS3743	WARNING LABEL "ARC FLASH AND SHOCK HAZARD"	
176	1	EMEDCO	SQS110	WARNING LABEL "DEVICE POWERED FROM SEVERAL SOURCES"	
177					
178					
179					
				****MISCELLANEOUS FIELD EQUIPMENT****	
185					
186					
187					
188					
189					
190					
191					
192					
193					
194					
195					
196					
197					
198					
199					

BILL OF MATERIAL

NAMEPLATE SCHEDULE

ITEM	DIMENSION	DESCRIPTION	FABRICATION COMMENTS
A	4" x 1"	HWBCP	NAMEPLATE TO BE BLACK WITH WHITE LETTERS WITH ADHESIVE BACK. TEXT SIZE TO BE .375
B	4" x 1"	ETHERNET INTERFACE PORT	NAMEPLATE TO BE BLACK WITH WHITE LETTERS WITH ADHESIVE BACK. TEXT SIZE TO BE .25

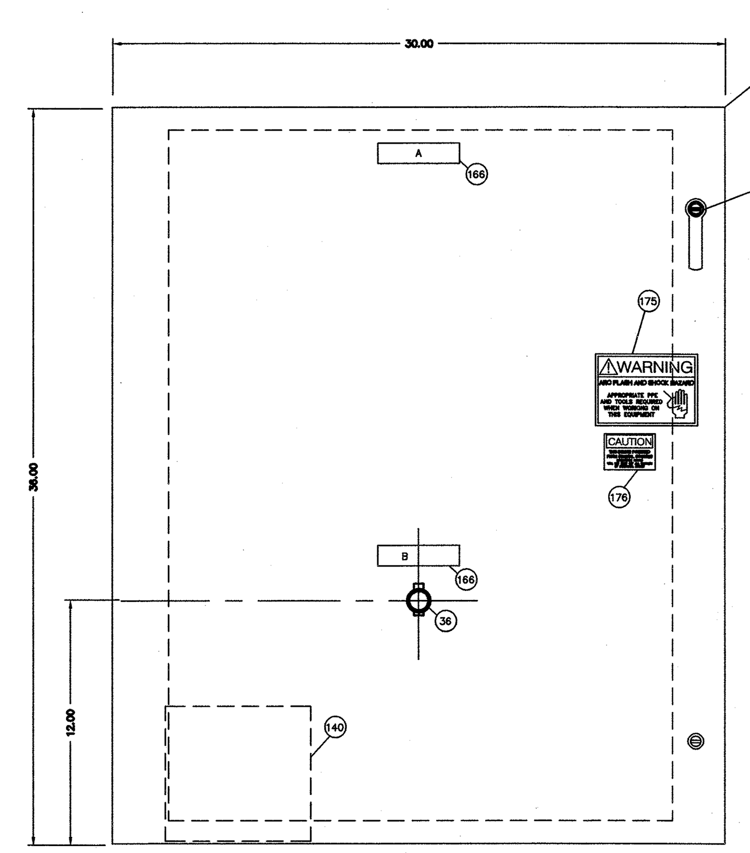

ENCLOSURE FRONT VIEW

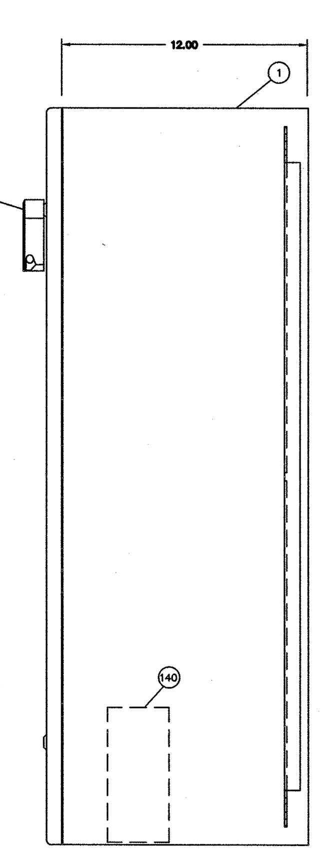

ENCLOSURE RIGHT SIDE VIEW

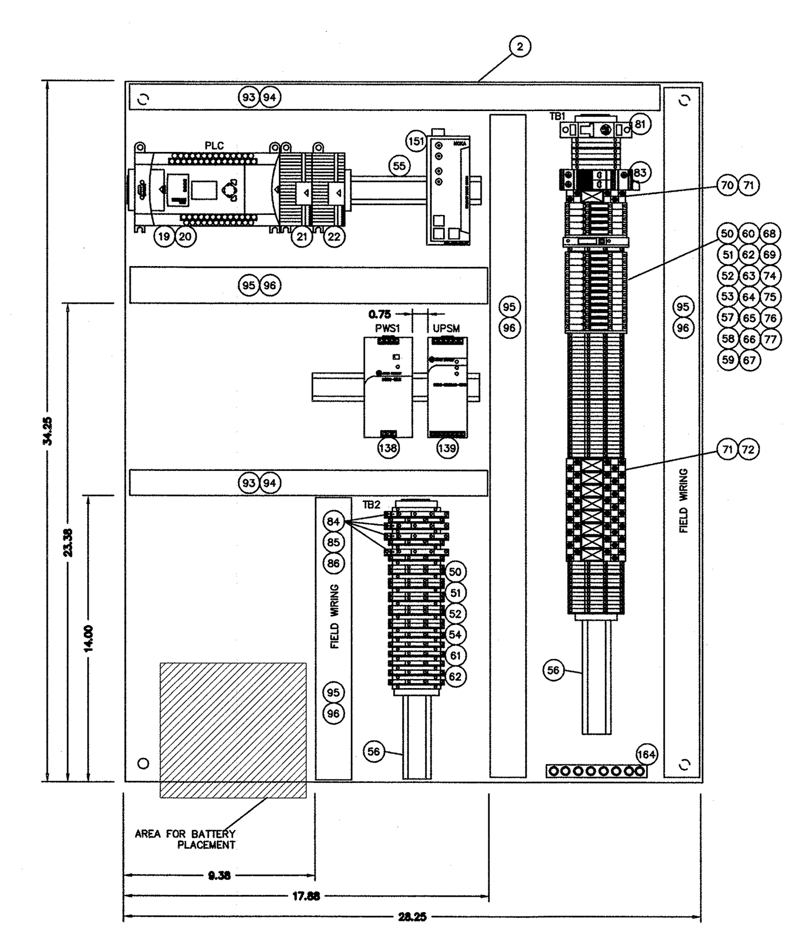

SUB PANEL

INSTALLING CONTRACTOR NOTES:

1) CONTRACTOR SHALL USE CAUTION WHEN LANDING CONDUITS IN THE BOTTOM OF ENCLOSURE TO AVOID INTERFERING WITH BATTERY PLACEMENT (ITEM 140).

EQUIPMENT LAYOUT

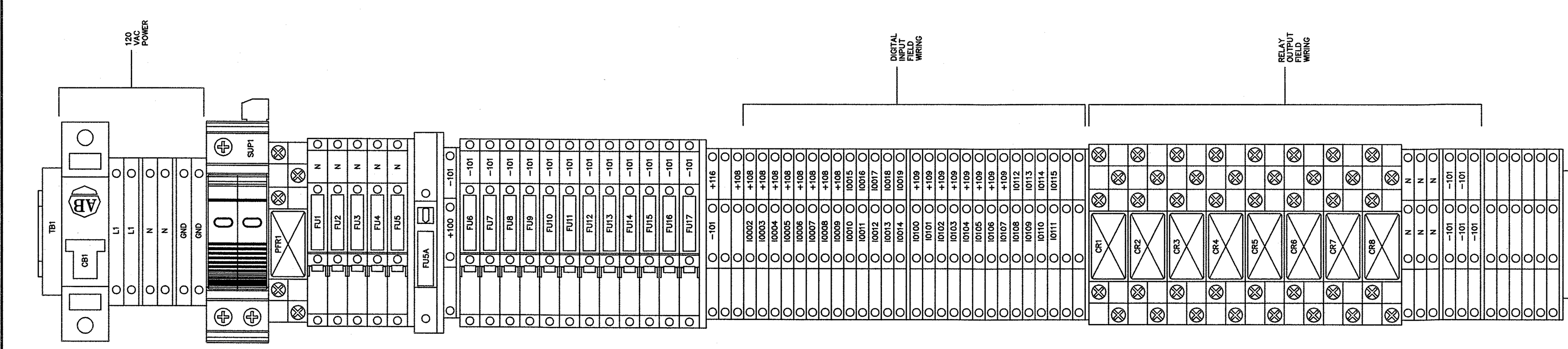

(1) 15 AMP CIRCUIT BREAKER
(1) 120VAC SURGE PROTECTOR
(43) 2-TIER TERMINALS
(6) 2-TIER END BARRIERS
(4) 1-TIER TERMINALS
(2) 1-TIER END BARRIERS
(2) GROUNDING TERMINALS
(18) FUSE BLOCKS
(3) FUSE BLOCK END BARRIERS
(1) 120VAC RELAY
(8) 24VDC RELAYS
(2) END ANCHORS

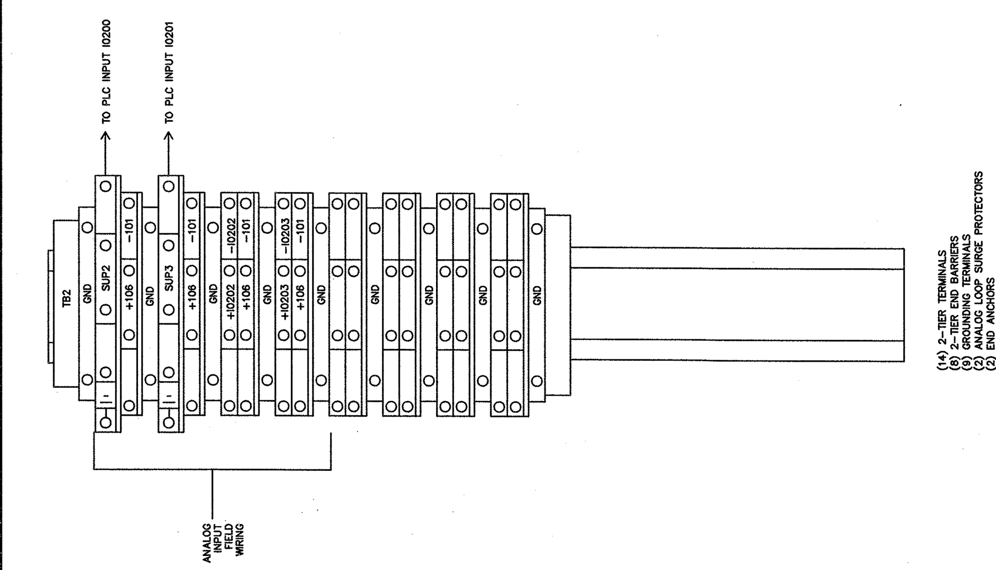

(14) 2-TIER TERMINALS
(8) 2-TIER END BARRIERS
(9) GROUNDING TERMINALS
(2) ANALOG LOOP SURGE PROTECTORS
(2) END ANCHORS

TERMINAL BLOCK LAYOUT

ISSUED FOR BID

WOODARD & CURRAN

980 Washington Street, Suite 325
Dedham, Massachusetts 02026
800.446.5518 | www.woodardcurran.com

COMMITMENT & INTEGRITY DRIVE RESULTS

THIS DOCUMENT IS THE PROPERTY OF WOODARD & CURRAN INC. AND ITS CLIENT. REPRODUCTION OR MODIFICATION WITHOUT WRITTEN PERMISSION IS PROHIBITED.

COMMONWEALTH OF MASSACHUSETTS
JONATHON H. GRANT
CONTROL SYSTEM
No. 49800
REGISTERED PROFESSIONAL ENGINEER
[illegible] 9-23-16

REV	DESCRIPTION	DATE

DESIGNED BY: PS
DRAWN BY: RPM
CHECKED BY: JHG
22912300-I101-I1XX.dwg

BID ALTERNATE #1
CONTROL PANEL HWBCP
PANEL DESIGN (SHEET 1 OF 3)

DEPARTMENT OF PUBLIC WORKS
NANTUCKET, MASSACHUSETTS

SURFSIDE WASTEWATER TREATMENT FACILITY UPGRADES

JOB NO.: 229123.00
DATE: SEPTEMBER 2016
SCALE: NTS
SHEET: 103 OF 116

I-101

\\woodardcurran.net\shared\Projects\229123 Nantucket MA Surfside WWTF Upgrades 2015-2016\wip\Drawings\I&C\Control Panels\22912300-I101-I1XX.dwg, Sep 20, 2016 - 3:55pm

22x34 SHEET
1:1

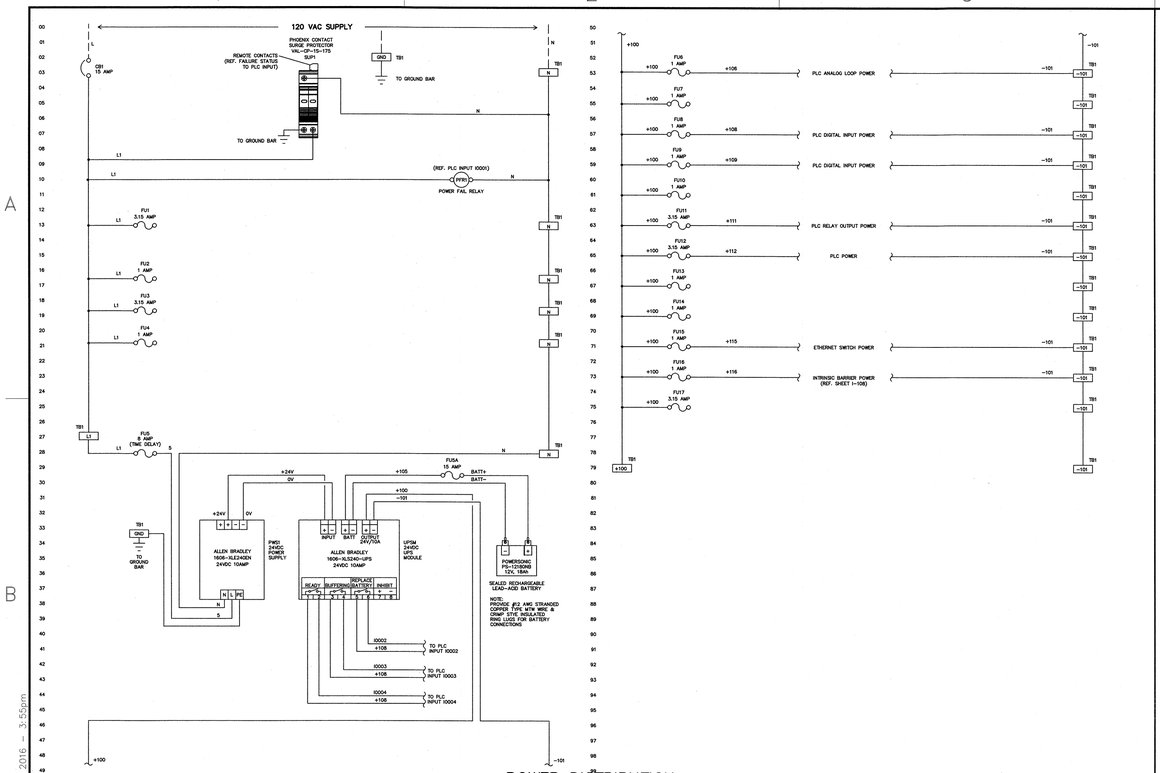

POWER DISTRIBUTION

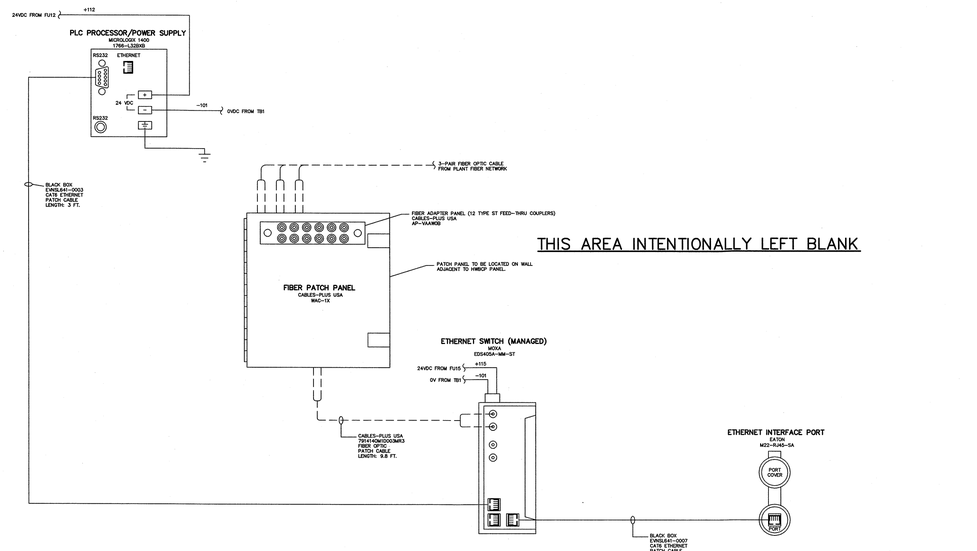

PORT DETAIL

MICROLOGIX 1400 PORT CONFIGURATION			
CHANNEL 0		CHANNEL 1	
PRIMARY PROTOCOL:	DF1 RADIO MODEM	PRIMARY PROTOCOL:	ETHERNET
BAUD:	9600	IP ADDRESS:	XXX.XXX.XXX.XX
NODE ADDRESS:	XX	SUBNET:	XXX.XXX.XXX.X
CONTROL LINE:	HALF DUPLEX MODEM	GATEWAY:	0.0.0.0
PRE-TRANSMIT DELAY:	0 (x5ms)	BOOTP ENABLE:	UNCHECKED
PARITY:	NONE	DHCP ENABLE:	UNCHECKED
		HTTP SERVER ENABLE:	CHECKED
		AUTO NEGOTIATE:	CHECKED
		PORT SETTING:	10/100 Mbps FULL DUPLEX/HALF DUPLEX
		MSG CONNECTION TIMEOUT:	(x1ms) : 15000
		MSG REPLY TIMEOUT:	(x1ms) : 3000

NOTE:
ALL WORK ON THIS SHEET IS PART OF BID ALTERNATE #1.

COMMUNICATIONS

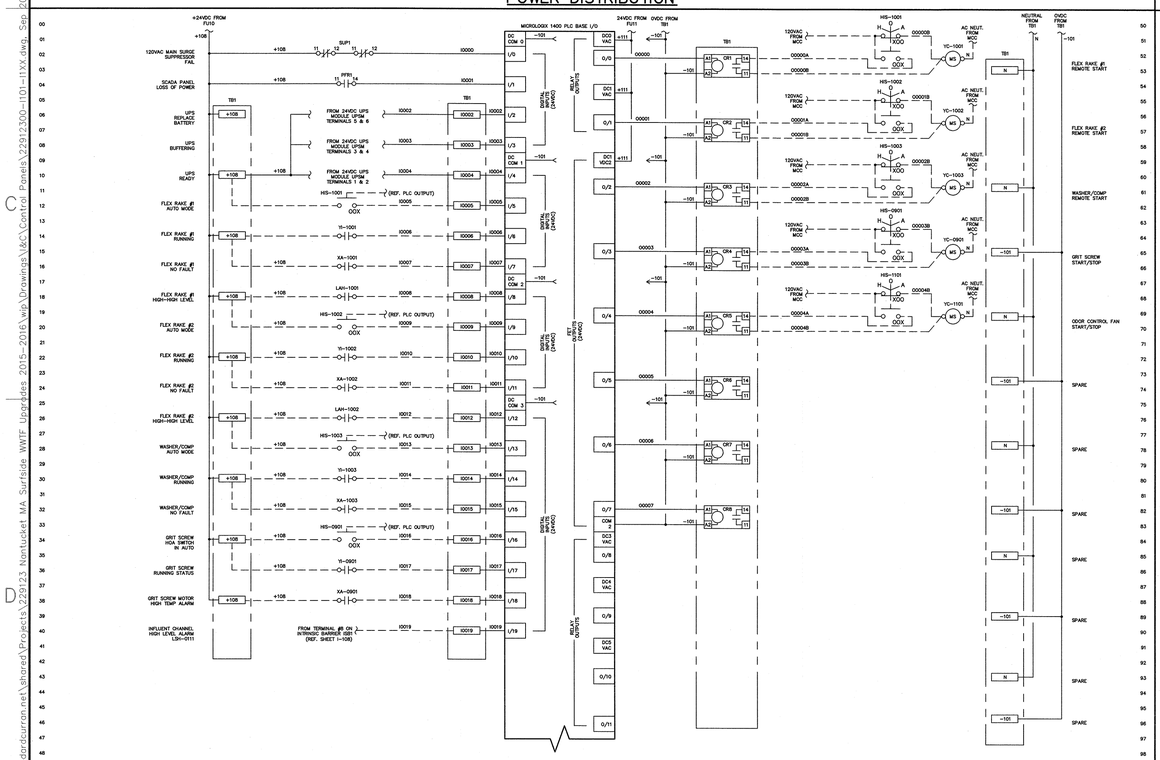

PLC BASE I/O – DIGITAL INPUTS & RELAY OUTPUTS

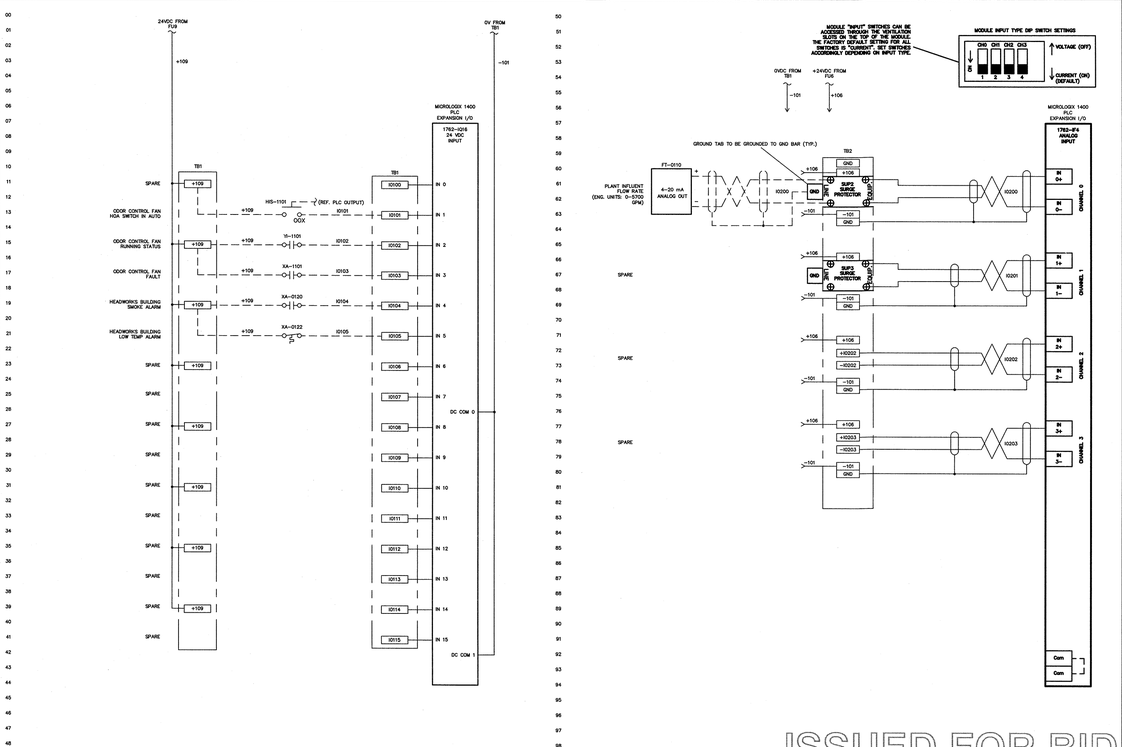

PLC BASE I/O – ANALOG INPUTS & OUTPUTS

ISSUED FOR BID

980 Washington Street, Suite 325
Dedham, Massachusetts 02026
800.446.5518 | www.woodardcurran.com

COMMITMENT & INTEGRITY DRIVE RESULTS

THIS DOCUMENT IS THE PROPERTY OF WOODARD & CURRAN INC. AND ITS CLIENT. REPRODUCTION OR MODIFICATION WITHOUT WRITTEN PERMISSION IS PROHIBITED.

COMMONWEALTH OF MASSACHUSETTS
CONDITION MONITORING & CONTROL SYSTEMS
NO. 48600
REGISTERED PROFESSIONAL ENGINEER
9-23-16

REV	DESCRIPTION	DATE

DESIGNED BY: PS
DRAWN BY: RPM
CHECKED BY: JHG
229123-00-I-101X.dwg

BID ALTERNATE #1
CONTROL PANEL HWBCP
DESIGN (SHEET 2 OF 3)

DEPARTMENT OF PUBLIC WORKS
NANTUCKET, MASSACHUSETTS

SURFSIDE WASTEWATER
TREATMENT FACILITY
UPGRADES

JOB NO.: 229123.00
DATE: SEPTEMBER 2016
SCALE: NTS
SHEET: 104 OF 116

I-102

\\woodardcurran.net\shared\Projects\229123 Nantucket MA Surfside WWTF Upgrades 2015-2016\wip\Drawings\C&C\Control Panels\229123-00-I-101X.dwg, Sep 20, 2016 - 3:55pm

22x34 SHEET
1:1

THIS AREA INTENTIONALLY LEFT BLANK

THIS AREA INTENTIONALLY LEFT BLANK

BILL OF MATERIAL

ITEM	QTY.	MANUFACTURER	PART NUMBER	DESCRIPTION	DESIGNATION
1	1	PEPPERL & FUCHS	KFD2-SR2-EX2.W	SWITCH ISOLATOR WITH RELAY OUTPUT	INTRINSIC BARRIER ISB1
2					
3	1	HOFFMAN	A12P12	BACK PANEL, 10.75" x 10.88"	
4	1	HOFFMAN	A-1212CHNF	ENCLOSURE, NEMA 4, 12.00" x 12.00" x 6.00"	
5	6FT	PANDUIT	F1X4LG6	WIRING DUCT, 1"W x 4"H	
6	6FT	PANDUIT	C1LG6	WIRING DUCT COVER, 1"W	
7	1	ALLEN BRADLEY	199-DR1	DIN RAIL, STANDARD	
8	3	PANEL FABRICATOR		NAMEPLATE, PHENOLIC, ENGRAVED	SEE SCHEDULE THIS SHEET
9					
10					
11					

NAMEPLATE SCHEDULE

ITEM	DIMENSION	DESCRIPTION	FABRICATION COMMENTS
C	8.50" x 1"	INTRINSIC BARRIER PANEL	NAMEPLATE TO BE BLACK WITH WHITE LETTERS WITH ADHESIVE BACK. TEXT SIZE TO BE .375. QUANTITY: 1
D	8.50" x 1"	INTRINSICALLY SAFE WIRING	NAMEPLATE TO BE YELLOW WITH BLACK LETTERS WITH ADHESIVE BACK. TEXT SIZE TO BE .375. QUANTITY: 2

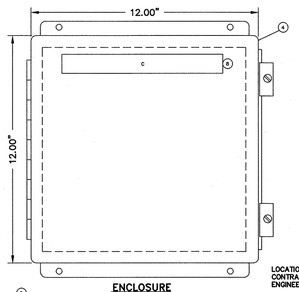

ENCLOSURE

LOCATION SHALL BE VERIFIED BY CONTRACTOR AND APPROVED BY ENGINEER.

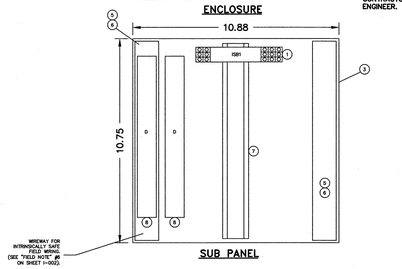

SUB PANEL

INTRINSIC BARRIER PANEL
EQUIPMENT LAYOUT

INTRINSIC BARRIER PANEL – EQUIPMENT LAYOUT

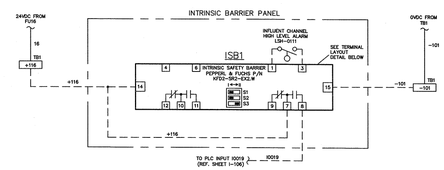

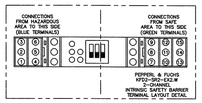

INTRINSIC BARRIER PANEL
WIRING DETAILS

WETWELL LEVEL CONTROL – WIRING DETAILS

ISSUED FOR BID

980 Washington Street, Suite 325
Dedham, Massachusetts 02026
800.446.5518 | www.woodardcurran.com

WOODARD & CURRAN

COMMITMENT & INTEGRITY DRIVE RESULTS

THIS DOCUMENT IS THE PROPERTY OF WOODARD & CURRAN INC. AND ITS CLIENT. REPRODUCTION OR MODIFICATION WITHOUT WRITTEN PERMISSION IS PROHIBITED.

COMMONWEALTH OF MASSACHUSETTS
JONATHON H. CONTROL SYSTEM
No. 49800
REGISTERED PROFESSIONAL ENGINEER
9-23-16

REV	DESCRIPTION	DATE

DESIGNED BY: PS
DRAWN BY: RPM
CHECKED BY: JHG
22912300-I101-I1XX.dwg

BID ALTERNATE #1
CONTROL PANEL HWBCP
DESIGN (SHEET 3 OF 3)

DEPARTMENT OF PUBLIC WORKS
NANTUCKET, MASSACHUSETTS

SURFSIDE WASTEWATER
TREATMENT FACILITY
UPGRADES

JOB NO.: 229123.00
DATE: SEPTEMBER 2016
SCALE: NTS
SHEET: 105 OF 116

I-103

\\woodardcurran.net\shared\Projects\229123 Nantucket MA Surfside WWTF Upgrades 2015-2016\wip\Drawings\I&C\Control Panels\22912300-I101-I1XX.dwg, Sep 20, 2016 - 3:55pm

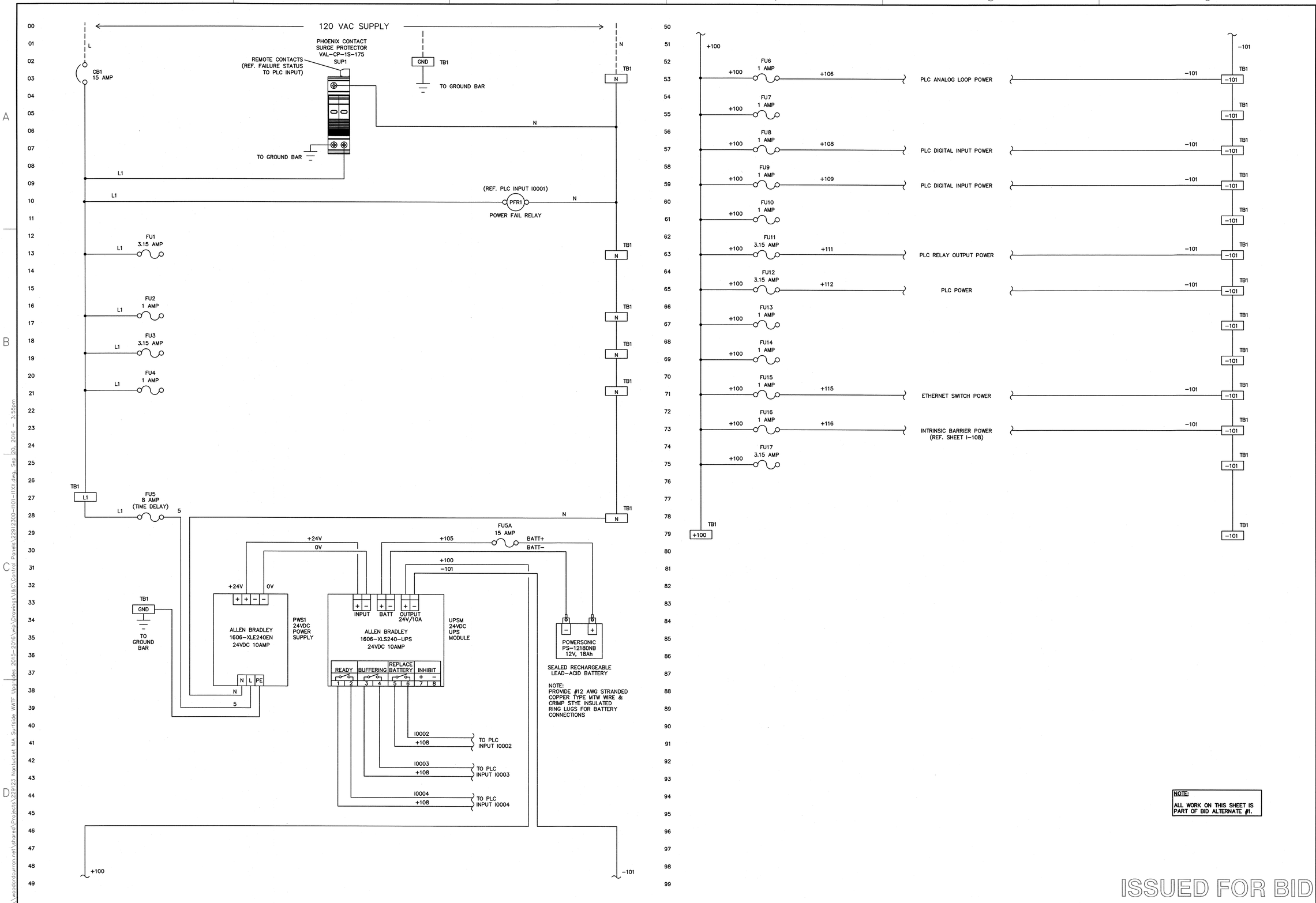

NOTE:
ALL WORK ON THIS SHEET IS PART OF BID ALTERNATE #1.

ISSUED FOR BID

980 Washington Street, Suite 325
Dedham, Massachusetts 02026
800.446.5518 | www.woodardcurran.com

COMMITMENT & INTEGRITY DRIVE RESULTS

WOODARD & CURRAN

THIS DOCUMENT IS THE PROPERTY OF WOODARD & CURRAN INC. AND ITS CLIENT. REPRODUCTION OR MODIFICATION WITHOUT WRITTEN PERMISSION IS PROHIBITED.

COMMONWEALTH OF MASSACHUSETTS
JONATHON H. SWEETSER
No. 48830
CONTROL SYSTEM
REGISTERED PROFESSIONAL ENGINEER
9-23-16

REV	DESCRIPTION	DATE

DESIGNED BY: PS
DRAWN BY: RPM
CHECKED BY: JHG
229123-00-I-101X.dwg

BID ALTERNATE #1
CONTROL PANEL HWBCP
POWER DISTRIBUTION

DEPARTMENT OF PUBLIC WORKS
NANTUCKET, MASSACHUSETTS

SURFSIDE WASTEWATER
TREATMENT FACILITY
UPGRADES

JOB NO.: 229123.00
DATE: SEPTEMBER 2016
SCALE: AS NOTED
SHEET: 106 OF 116

I-104

22x34 SHEET
1:1

\\woodardcurran.net\shares\Projects\229123 Nantucket MA Surfside WWTF Upgrades 2015-2016\wip\Drawings\I&C\Control Panels\229123-00-I-101X.dwg, Sep 20, 2016 - 3:55pm

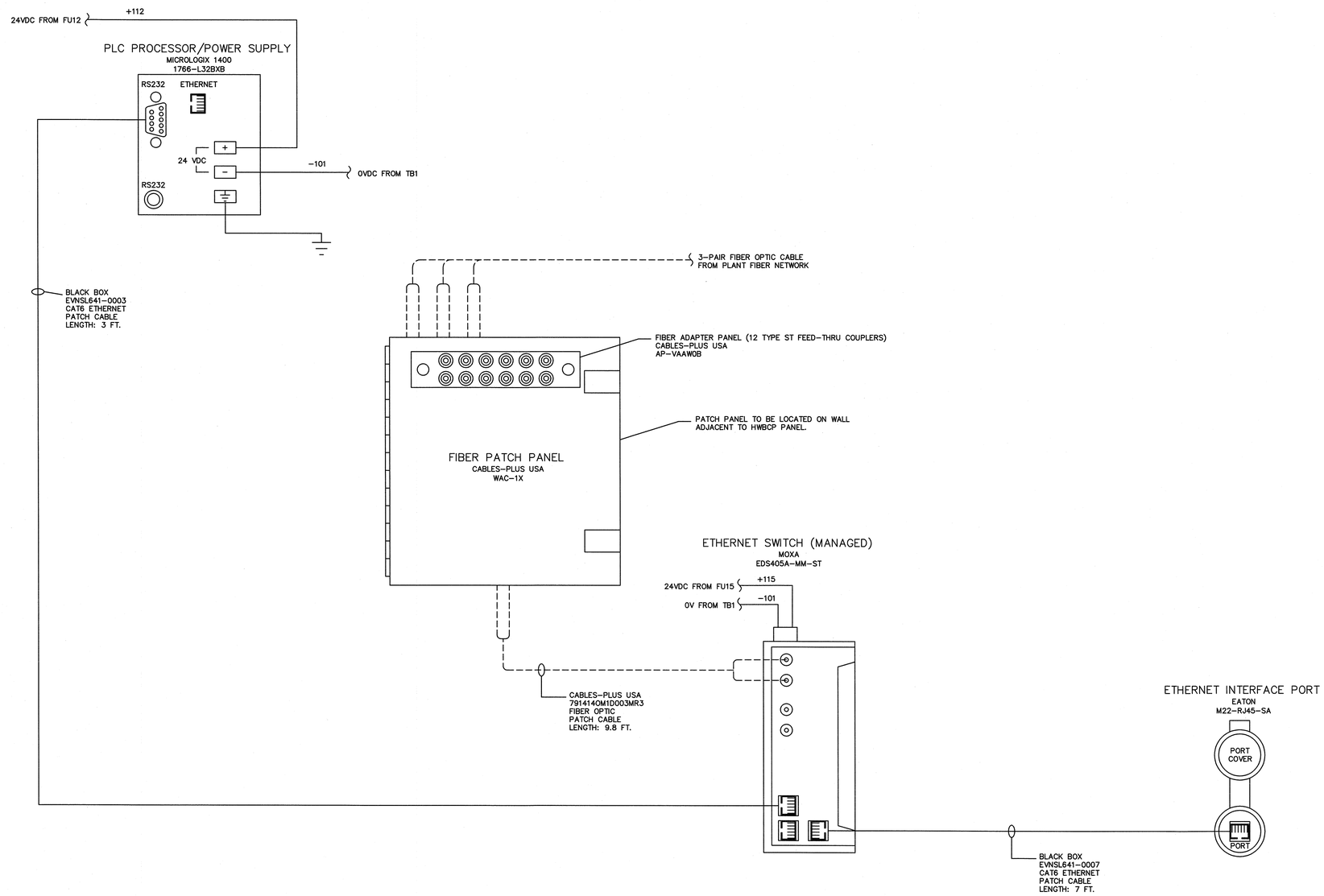

PORT DETAIL

MICROLOGIX 1400 PORT CONFIGURATION			
CHANNEL 0		CHANNEL 1	
PRIMARY PROTOCOL:	DF1 RADIO MODEM	PRIMARY PROTOCOL:	ETHERNET
BAUD:	9600	IP ADDRESS:	XXX.XXX.XXX.XX
NODE ADDRESS:	XX	SUBNET:	XXX.XXX.XXX.X
CONTROL LINE:	HALF DUPLEX MODEM	GATEWAY:	0.0.0.0
PRE-TRANSMIT DELAY:	0 (x5ms)	BOOTP ENABLE:	UNCHECKED
PARITY:	NONE	DHCP ENABLE:	UNCHECKED
		HTSP SERVER ENABLE:	CHECKED
		AUTO NEGOTIATE:	CHECKED
		PORT SETTING:	10/100 Mbps FULL DUPLEX/HALF DUPLEX
		MSG CONNECTION TIMEOUT:	(x1ms) : 15000
		MSG REPLY TIMEOUT:	(x1ms) : 3000

NOTE:
ALL WORK ON THIS SHEET IS PART OF BID ALTERNATE #1.

ISSUED FOR BID

WOODARD & CURRAN
980 Washington Street, Suite 325
Dedham, Massachusetts 02026
800.446.5518 | www.woodardcurran.com
COMMITMENT & INTEGRITY DRIVE RESULTS

THIS DOCUMENT IS THE PROPERTY OF WOODARD & CURRAN INC. AND ITS CLIENT. REPRODUCTION OR MODIFICATION WITHOUT WRITTEN PERMISSION IS PROHIBITED.

COMMONWEALTH OF MASSACHUSETTS
JONATHON H. CONTROL SYSTEM
No. 49800
REGISTERED PROFESSIONAL ENGINEER
9-23-16

REV	DESCRIPTION	DATE

DESIGNED BY: PS
DRAWN BY: RPM
CHECKED BY: JHG
22912300-I101-I1XX.dwg

BID ALTERNATE #1
CONTROL PANEL HWBCP
COMMUNICATIONS

DEPARTMENT OF PUBLIC WORKS
NANTUCKET, MASSACHUSETTS

SURFSIDE WASTEWATER
TREATMENT FACILITY
UPGRADES

JOB NO.: 229123.00
DATE: SEPTEMBER 2016
SCALE: AS NOTED
SHEET: 107 OF 116

I-105

22x34 SHEET
1:1

\\woodardcurran.net\shared\Projects\229123 Nantucket MA Surfside WWTF Upgrades 2015-2016\wip\Drawings\I&C\Control Panels\22912300-I101-I1XX.dwg, Sep 20, 2016 - 3:56pm

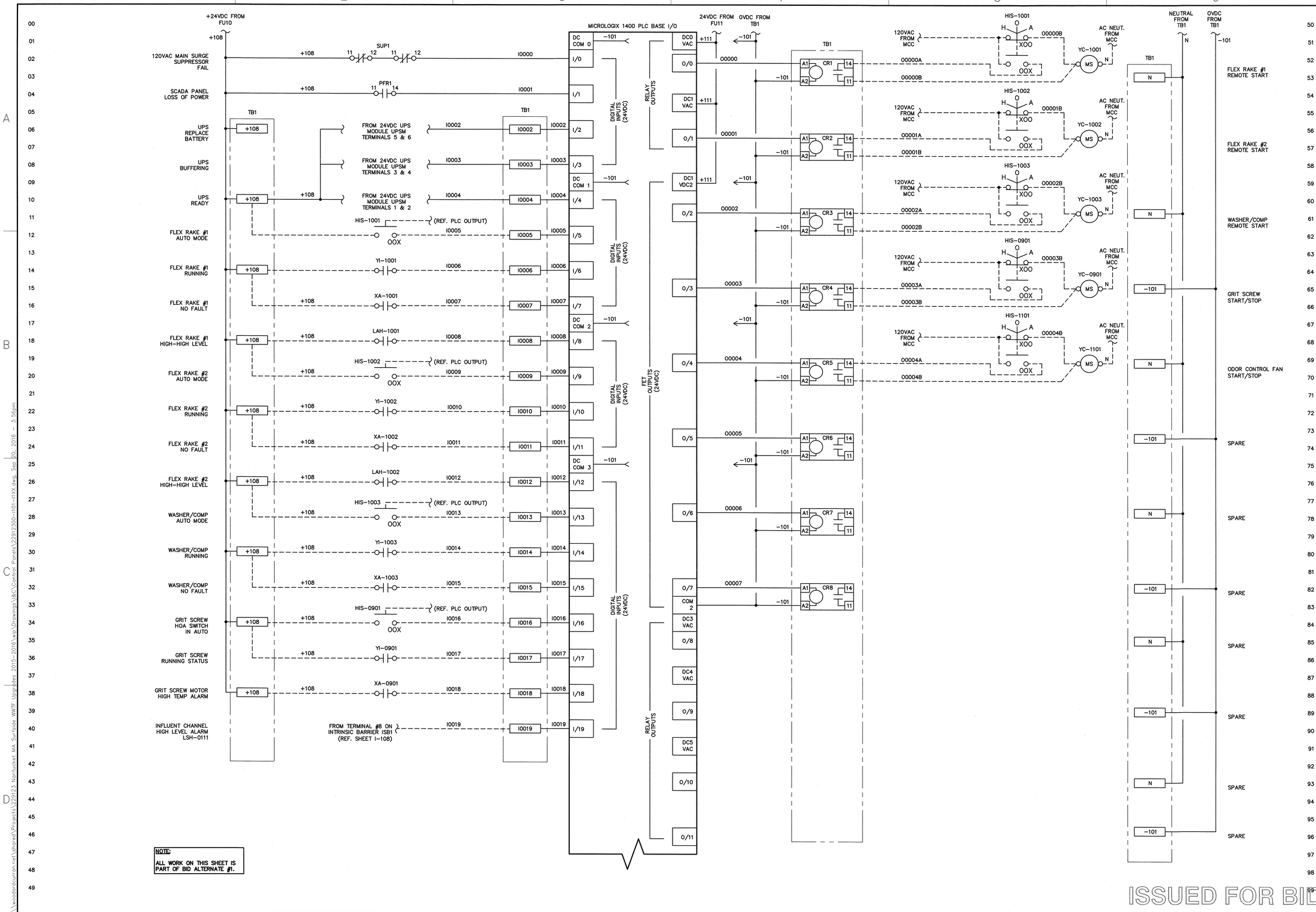

NOTE:
ALL WORK ON THIS SHEET IS PART OF BID ALTERNATE #1.

ISSUED FOR BID

980 Washington Street, Suite 325
Dedham, Massachusetts 02026
800.446.5518 | www.woodardcurran.com
WOODARD & CURRAN
COMMITMENT & INTEGRITY DRIVE RESULTS

THIS DOCUMENT IS THE PROPERTY OF WOODARD & CURRAN INC. AND ITS CLIENT. REPRODUCTION OR MODIFICATION WITHOUT WRITTEN PERMISSION IS PROHIBITED.

COMMONWEALTH OF MASSACHUSETTS
JONATHON H. CONTROL SYSTEM
No. 48600
REGISTERED PROFESSIONAL ENGINEER
9-23-16

REV	DESCRIPTION	DATE

DESIGNED BY: PS
DRAWN BY: RPM
CHECKED BY: JHG
22912300-I101-I1XX.dwg

BID ALTERNATE #1
CONTROL PANEL HWBCP
PLC BASE I\O DIGITAL
INPUTS & RELAY OUTPUTS

DEPARTMENT OF PUBLIC WORKS
NANTUCKET, MASSACHUSETTS

SURFSIDE WASTEWATER TREATMENT FACILITY UPGRADES

JOB NO.: 229123.00
DATE: SEPTEMBER 2016
SCALE: AS NOTED
SHEET: 108 OF 116

I-106

22x34 SHEET
1:1

\\woodardcurran.net\shared\Projects\229123 Nantucket MA Surfside WWTF Upgrades 2015-2016\wip\Drawings\I&C\Control Panels\22912300-I101-I1XX.dwg, Sep 20, 2016 - 3:56pm

22x34 SHEET
1:1

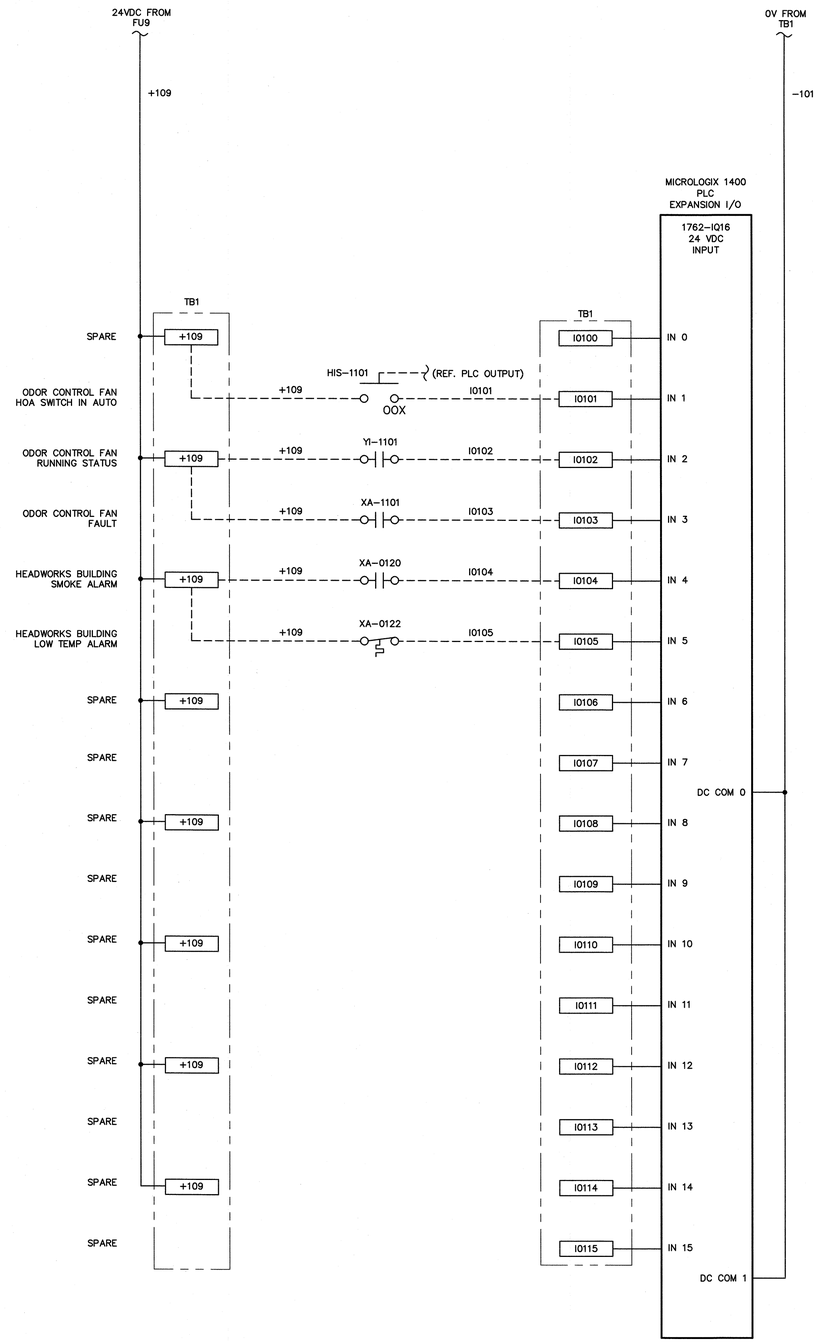

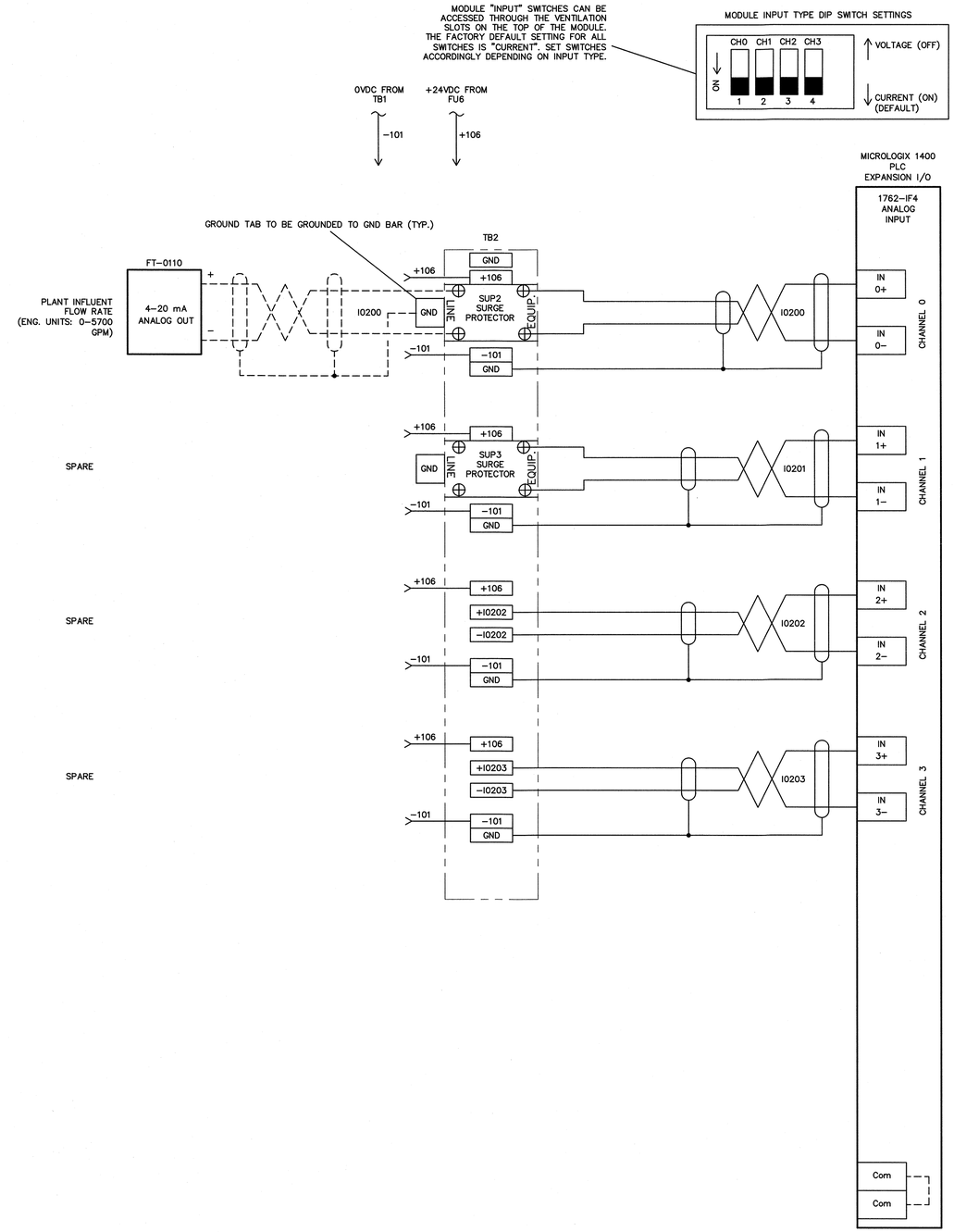

NOTE:

ALL WORK ON THIS SHEET IS PART OF BID ALTERNATE #1.

ISSUED FOR BID

980 Washington Street, Suite 325
Dedham, Massachusetts 02026
800.446.5518 | www.woodardcurran.com

COMMITMENT & INTEGRITY DRIVE RESULTS

THIS DOCUMENT IS THE PROPERTY OF WOODARD & CURRAN INC. AND ITS CLIENT. REPRODUCTION OR MODIFICATION WITHOUT WRITTEN PERMISSION IS PROHIBITED.

REV	DESCRIPTION	DATE

DESIGNED BY: PS | CHECKED BY: JHG
DRAWN BY: RPM | 2291200-I101-I1XX.dwg

BID ALTERNATE #1
CONTROL PANEL HWBCP
PLC EXPANSION IO
DIGITAL & ANALOG INPUTS

DEPARTMENT OF PUBLIC WORKS
NANTUCKET, MASSACHUSETTS

SURFSIDE WASTEWATER TREATMENT FACILITY UPGRADES

JOB NO.: 229123.00
DATE: SEPTEMBER 2016
SCALE: AS NOTED
SHEET: 109 OF 116

I-107

\\woodardcuran.net\shared\Projects\229123 Nantucket MA Surfside WWTF Upgrades 2015-2016\wip\Drawings\I&C\Control Panels\2291200-I101-I1XX.dwg, Sep 20, 2016 - 3:56pm

22x34 SHEET
1:1

BILL OF MATERIAL

ITEM	QTY.	MANUFACTURER	PART NUMBER	DESCRIPTION	DESIGNATION
1	1	PEPPERL & FUCHS	KFD2-SR2-EX2.W	SWITCH ISOLATOR WITH RELAY OUTPUT	INTRINSIC BARRIER ISB1
2					
3	1	HOFFMAN	A12P12	BACK PANEL, 10.75" x 10.88"	
4	1	HOFFMAN	A-1212CHNF	ENCLOSURE, NEMA 4, 12.00" x 12.00" x 6.00"	
5	6FT	PANDUIT	F1X4LG6	WIRING DUCT, 1"W x 4"H	
6	6FT	PANDUIT	C1LG6	WIRING DUCT COVER, 1"W	
7	1	ALLEN BRADLEY	199-DR1	DIN RAIL, STANDARD	
8	3	PANEL FABRICATOR		NAMEPLATE, PHENOLIC, ENGRAVED	SEE SCHEDULE THIS SHEET
9					
10					
11					

NAMEPLATE SCHEDULE

ITEM	DIMENSION	DESCRIPTION	FABRICATION COMMENTS
C	8.50" x 1"	INTRINSIC BARRIER PANEL	NAMEPLATE TO BE BLACK WITH WHITE LETTERS WITH ADHESIVE BACK. TEXT SIZE TO BE .375. QUANTITY: 1
D	8.50" x 1"	INTRINSICALLY SAFE WIRING	NAMEPLATE TO BE YELLOW WITH BLACK LETTERS WITH ADHESIVE BACK. TEXT SIZE TO BE .375. QUANTITY: 2

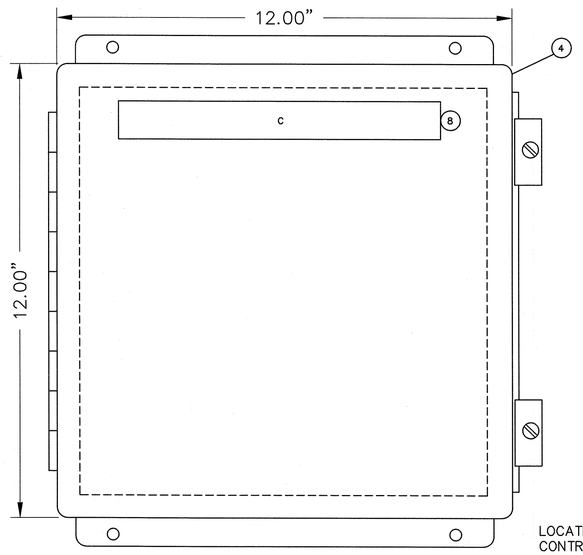

LOCATION SHALL BE VERIFIED BY CONTRACTOR AND APPROVED BY ENGINEER.

ENCLOSURE

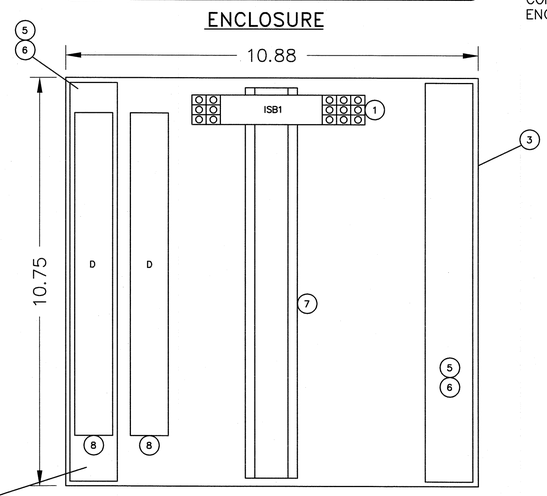

WIREWAY FOR INTRINSICALLY SAFE FIELD WIRING. (SEE "FIELD NOTE" #6 ON SHEET I-002).

SUB PANEL

INTRINSIC BARRIER PANEL
EQUIPMENT LAYOUT

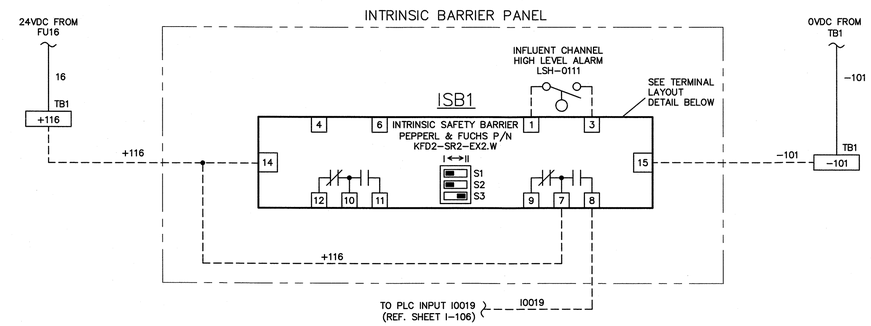

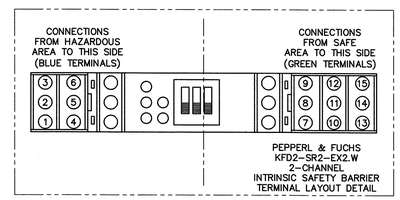

INTRINSIC BARRIER PANEL
WIRING DETAILS

NOTE:
ALL WORK ON THIS SHEET IS PART OF BID ALTERNATE #1.

ISSUED FOR BID

WOODARD & CURRAN
980 Washington Street, Suite 325
Dedham, Massachusetts 02026
800.446.5518 | www.woodardcurran.com
COMMITMENT & INTEGRITY DRIVE RESULTS

THIS DOCUMENT IS THE PROPERTY OF WOODARD & CURRAN INC. AND ITS CLIENT. REPRODUCTION OR MODIFICATION WITHOUT WRITTEN PERMISSION IS PROHIBITED.

COMMONWEALTH OF MASSACHUSETTS
JONATHAN H. HARRIS
CONTROL SYSTEM
No. 49800
REGISTERED PROFESSIONAL ENGINEER
9-23-16

REV	DESCRIPTION	DATE

DESIGNED BY: PS
DRAWN BY: RPM
CHECKED BY: JHG
22912300-I101-I1XX.dwg

BID ALTERNATE #1
CONTROL PANEL HWBCP
INTRINSIC BARRIER PANEL
DETAILS

DEPARTMENT OF PUBLIC WORKS
NANTUCKET, MASSACHUSETTS

SURFSIDE WASTEWATER TREATMENT FACILITY UPGRADES

JOB NO.: 229123.00
DATE: SEPTEMBER 2016
SCALE: AS NOTED
SHEET: 110 OF 116

I-108

\\woodardcurran.net\shared\Projects\229123 Nantucket MA Surfside WWTF Upgrades 2015-2016\wip\Drawings\I&C\Control Panels\22912300-I101-I1XX.dwg, Sep 20, 2016 - 3:56pm

22x34 SHEET
1:1

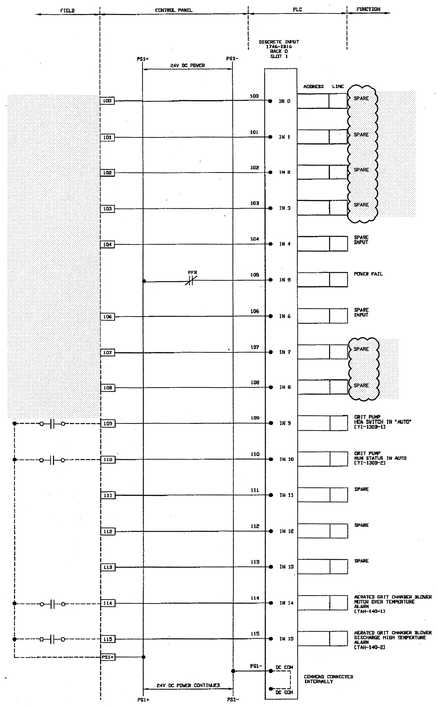

PLC I/O WIRING – DIGITAL INPUTS

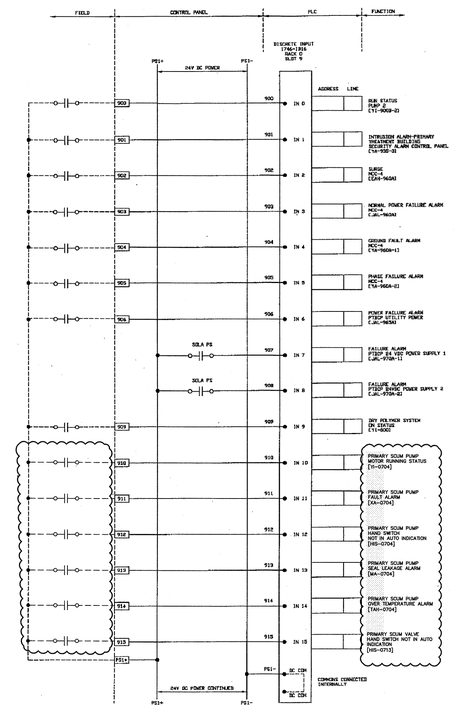

PLC I/O WIRING – DIGITAL INPUTS

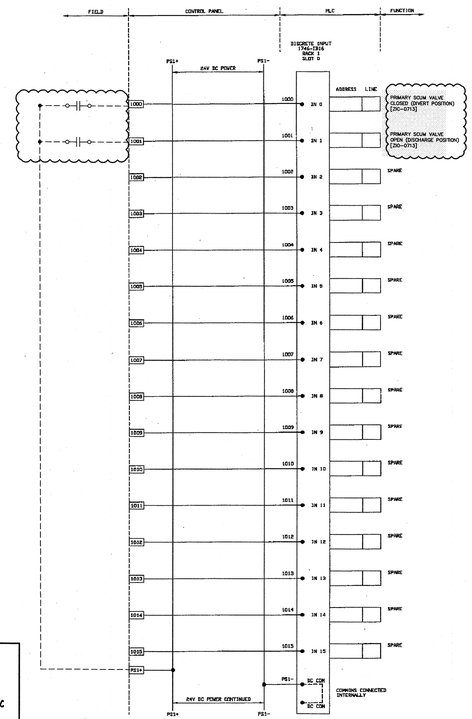

PLC I/O WIRING – DIGITAL INPUTS

NOTE:

ITEMS & ASSOCIATED WIRING SHOWN IN CLOUDED AREAS DESIGNED BY WOODARD & CURRAN. ALL ADDITIONAL COMPONENTS & WIRING SHOWN REPRESENT EQUIPMENT FROM A PREVIOUS DESIGN BY OTHERS.

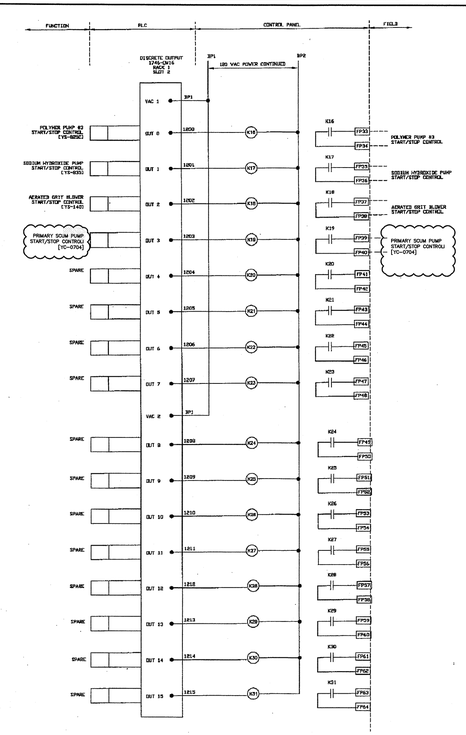

PLC I/O WIRING – RELAY OUTPUTS

ISSUED FOR BID

980 Washington Street, Suite 325
Dedham, Massachusetts 02026
800.446.5518 | www.woodardcurran.com

WOODARD & CURRAN

COMMITMENT & INTEGRITY DRIVE RESULTS

THIS DOCUMENT IS THE PROPERTY OF WOODARD & CURRAN INC. AND ITS CLIENT. REPRODUCTION OR MODIFICATION WITHOUT WRITTEN PERMISSION IS PROHIBITED.

COMMONWEALTH OF MASSACHUSETTS
JONATHAN H. JACOBS
CONTROL SYSTEM
No. 43820
REGISTERED PROFESSIONAL ENGINEER
9-23-16

REV	DESCRIPTION	DATE

DESIGNED BY: PS
DRAWN BY: RPM
CHECKED BY: JHG
I-201.dwg

PRIMARY TREATMENT BUILDING
EXISTING CONTROL PANEL (PTBCP)
PLC I/O MODIFICATIONS

DEPARTMENT OF PUBLIC WORKS
NANTUCKET, MASSACHUSETTS

SURFSIDE WASTEWATER TREATMENT FACILITY UPGRADES

JOB NO.: 229123.00
DATE: SEPTEMBER 2016
SCALE: AS NOTED
SHEET: 111 OF 116

I-201

\\woodardcurran.net\shared\Projects\229123 Nantucket MA Surfside WWTF Upgrades 2015-2016\wip\Drawings\E&C\Control Panels\Existing Panel Modifications\I-201.dwg, Sep 20, 2016 - 3:57pm

22x34 SHEET
1:1

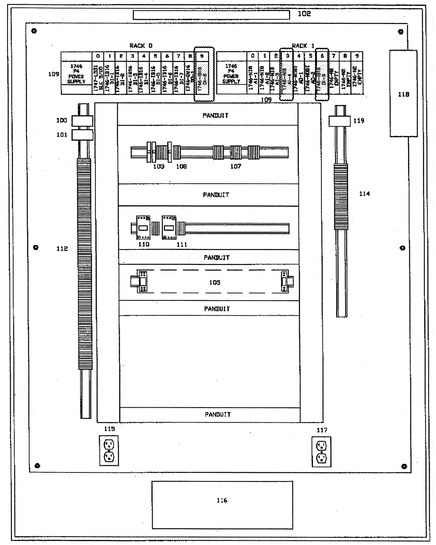

INTERNAL ELEVATION

PANEL LAYOUT

CP LEGEND

ITEM	DESCRIPTION	NAMEPLATE
1	NAMEPLATE	ADVANCED TREATMENT BUILDING
2	FLAT PANEL INDUSTRIAL COMPUTER	- - -
3	- - -	- - -
4	- - -	- - -
5	- - -	- - -
6	- - -	- - -
7	- - -	- - -
8	- - -	- - -
9	- - -	- - -
10	- - -	- - -

ITEM	DESCRIPTION	NAMEPLATE
100	- - -	DISTRIBUTION BLOCK - - -
101	SA-1	SURGE ARRESTOR, 120 VAC, 1 PHASE
102	- - -	PANEL LIGHT
103	PCR INCS	CIRCUIT BREAKERS
104	- - -	- - -
105	- - -	CONTROL RELAYS
106	- - -	- - -
107	PCR INCS	LINE VOLTAGE FIELD WIRING TERMINALS
108	PCR INCS	TERMINAL BLOCKS - 120V AC POWER - - -
109	- - -	PROGRAMMABLE LOGIC CONTROLLER - - -
110	PCR INCS	POWER SUPPLIES - 24V DC - - -
111	PCR INCS	TERMINAL BLOCKS - 24V DC POWER - - -
112	PCR INCS	TERMINAL BLOCKS - DISCRETES - - -
113	- - -	- - -
114	PCR INCS	TERMINAL BLOCKS - ANALOGS - - -
115	R-1	RECEPTACLE, UPS - - -
116	UPS	UNINTERRUPTABLE POWER SUPPLY - - -
117	R-2	DUPLEX GFI RECEPTACLE - - -
118	- - -	FIBER OPTIC PATCH PANEL - - -
119	- - -	FD/ETH SWITCH - - -
120	- - -	- - -

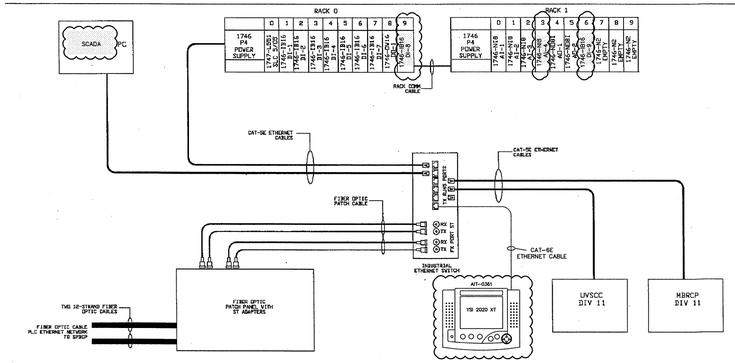

MATERIAL LIST, PLC RACK LAYOUT & COMMUNICATIONS

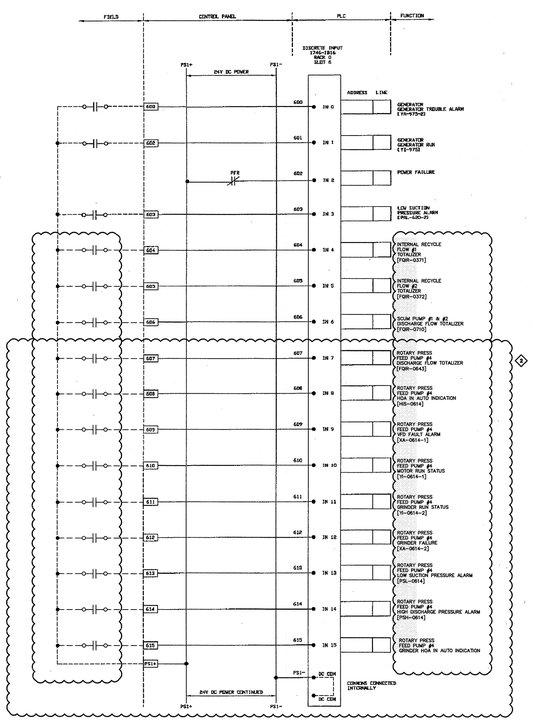

PLC I/O WIRING – DIGITAL INPUTS

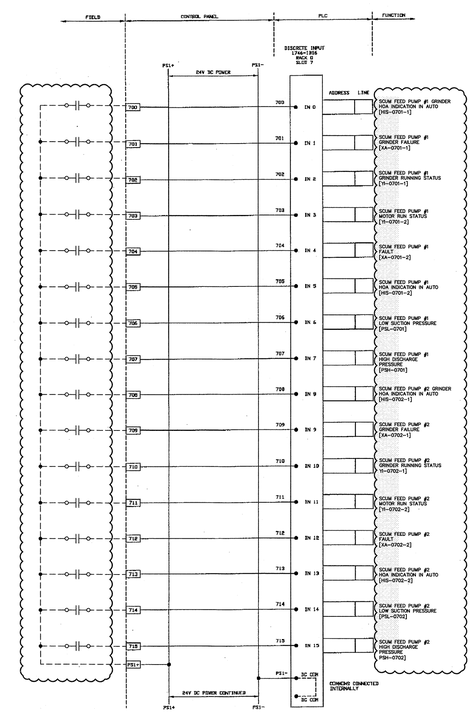

PLC I/O WIRING – DIGITAL INPUTS

NOTE:

ITEMS & ASSOCIATED WIRING SHOWN IN CLOUDED AREAS DESIGNED BY WOODARD & CURRAN. ALL ADDITIONAL COMPONENTS & WIRING SHOWN REPRESENT EQUIPMENT FROM A PREVIOUS DESIGN BY OTHERS.

2. ROTARY PRESS FEED PUMP #4 AND GRINDER #4 ARE PART OF BID ALTERNATE #3

ISSUED FOR BID

980 Washington Street, Suite 325
Dedham, Massachusetts 02026
800.446.5516 | www.woodardcurran.com
WOODARD & CURRAN
COMMITMENT & INTEGRITY DRIVE RESULTS

THIS DOCUMENT IS THE PROPERTY OF WOODARD & CURRAN INC. AND ITS CLIENT. REPRODUCTION OR MODIFICATION WITHOUT WRITTEN PERMISSION IS PROHIBITED.

COMMONWEALTH OF MASSACHUSETTS
JONATHAN R. PAGE
No. 48800
REGISTERED PROFESSIONAL ENGINEER
R-23-14

REV	DESCRIPTION	DATE

DESIGNED BY: PS
DRAWN BY: RPM
CHECKED BY: JHG
I-303.dwg

ADVANCED TREATMENT BUILDING EXISTING CONTROL PANEL (ATBCP) PLC I/O MODIFICATIONS (SHEET 1 OF 4)

DEPARTMENT OF PUBLIC WORKS
NANTUCKET, MASSACHUSETTS

SURFSIDE WASTEWATER TREATMENT FACILITY UPGRADES

JOB NO.: 229123.00
DATE: SEPTEMBER 2016
SCALE: AS–NOTED
SHEET: 112 OF 116

I-301

\\woodardcurran.net\shared\Projects\229123 Nantucket MA Surfside WWTF Upgrades 2015-2016\wip\Drawings\W&C\Control Panels\Existing Panel Modifications\I-303.dwg, Sep 20, 2016 - 3:58pm

22x34 SHEET
1:1

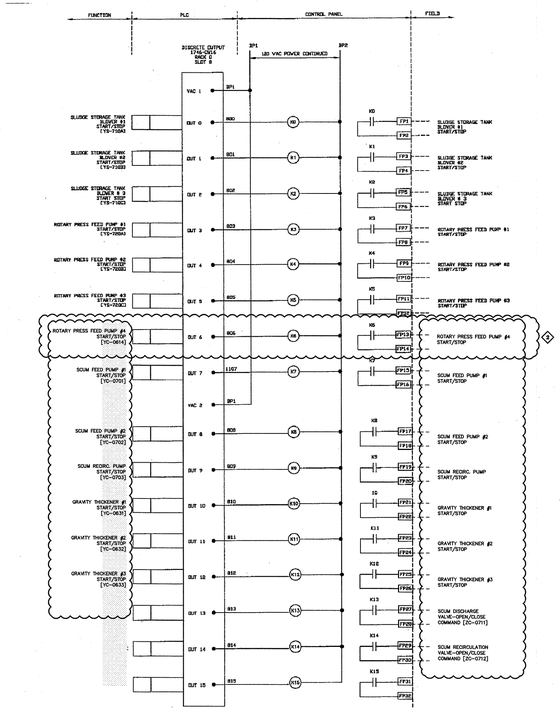

PLC I/O WIRING – RELAY OUTPUTS

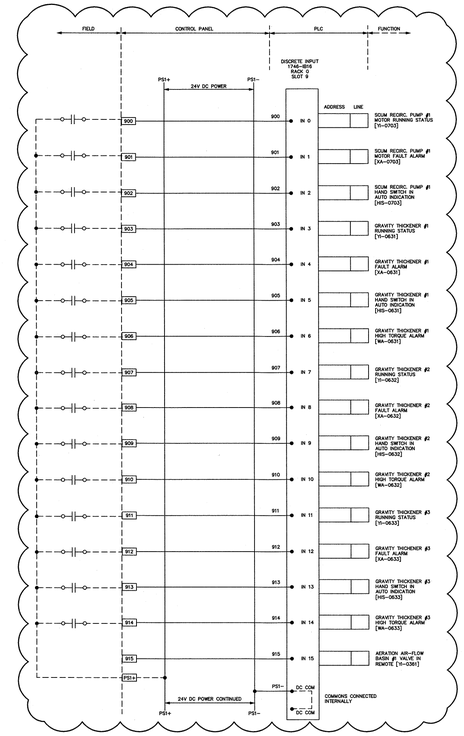

PLC I/O WIRING – DIGITAL INPUTS

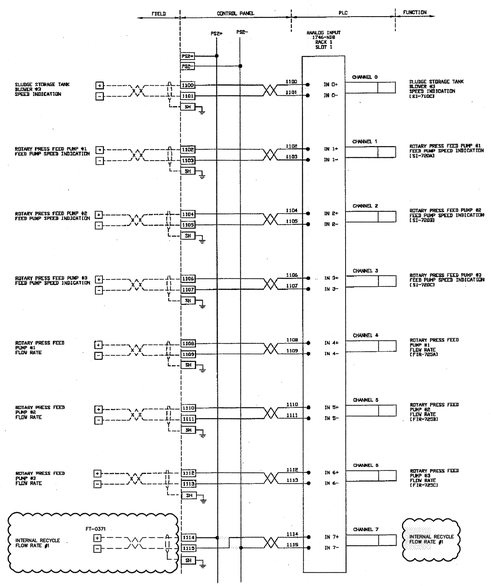

PLC I/O WIRING – ANALOG INPUTS

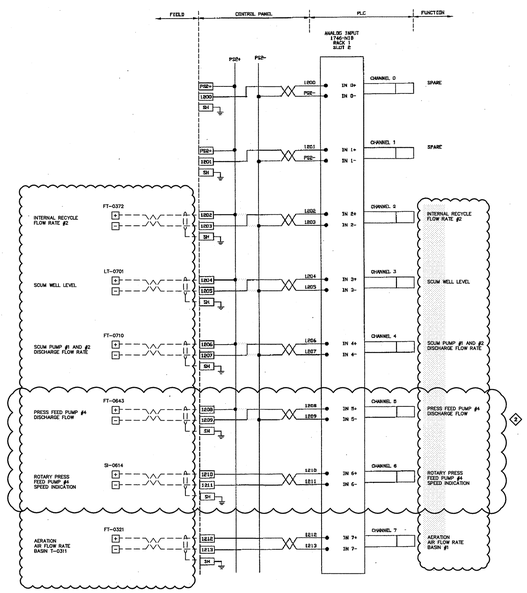

PLC I/O WIRING – ANALOG INPUTS

NOTE:

ITEMS & ASSOCIATED WIRING SHOWN IN CLOUDED AREAS DESIGNED BY WOODARD & CURRAN. ALL ADDITIONAL COMPONENTS & WIRING SHOWN REPRESENT EQUIPMENT FROM A PREVIOUS DESIGN BY OTHERS.

1. ROTARY PRESS FEED PUMP #4 AND GRINDER #4 ARE PART OF BID ALTERNATE #3

ISSUED FOR BID

980 Washington Street, Suite 325
Dedham, Massachusetts 02026
800.446.5518 | www.woodardcurran.com
WOODARD & CURRAN

COMMITMENT & INTEGRITY DRIVE RESULTS

THIS DOCUMENT IS THE PROPERTY OF WOODARD & CURRAN INC. AND ITS CLIENT. REPRODUCTION OR MODIFICATION WITHOUT WRITTEN PERMISSION IS PROHIBITED.

COMMONWEALTH OF MASSACHUSETTS
JONATHAN P. PARKER
CONTROL SYSTEM
No. 48800
REGISTERED PROFESSIONAL ENGINEER
9-23-16

REV	DESCRIPTION	DATE

DESIGNED BY: PS | CHECKED BY: JHG
DRAWN BY: RPM | I-303.dwg

ADVANCED TREATMENT BUILDING
EXISTING CONTROL PANEL (ATBCP)
PLC I/O MODIFICATIONS (SHEET 2 OF 4)

DEPARTMENT OF PUBLIC WORKS
NANTUCKET, MASSACHUSETTS

SURFSIDE WASTEWATER TREATMENT FACILITY UPGRADES

JOB NO.: 229123.00
DATE: SEPTEMBER 2016
SCALE: AS NOTED
SHEET: 113 OF 116

I-302

\\woodardcurran.net\stored\Projects\229123 Nantucket MA Surfside WWTF Upgrades 2015-2016\wip\Drawings\dc\Control Panels\Existing Panel Modifications\I-303.dwg, Sep 20, 2016 - 3:58pm

22x34 SHEET
1:1

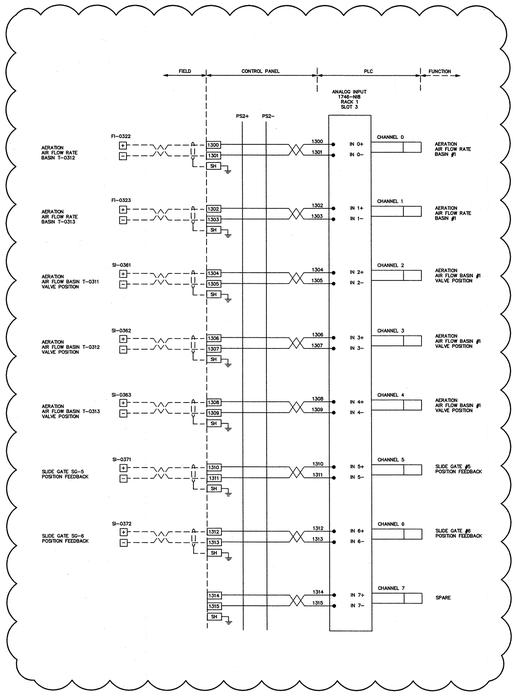

PLC I/O WIRING – ANALOG INPUTS

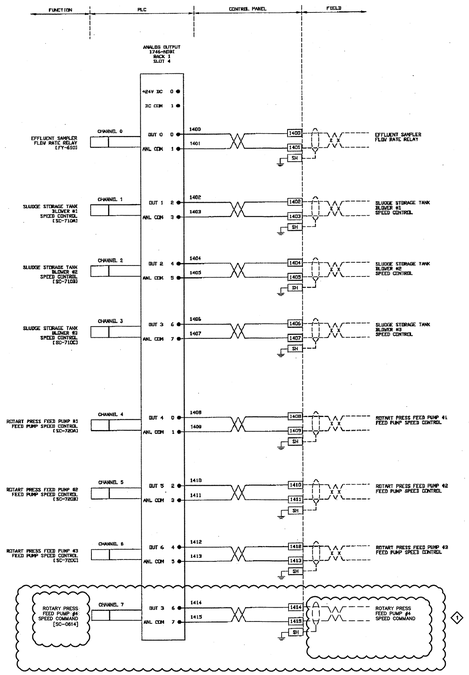

PLC I/O WIRING – ANALOG OUTPUTS

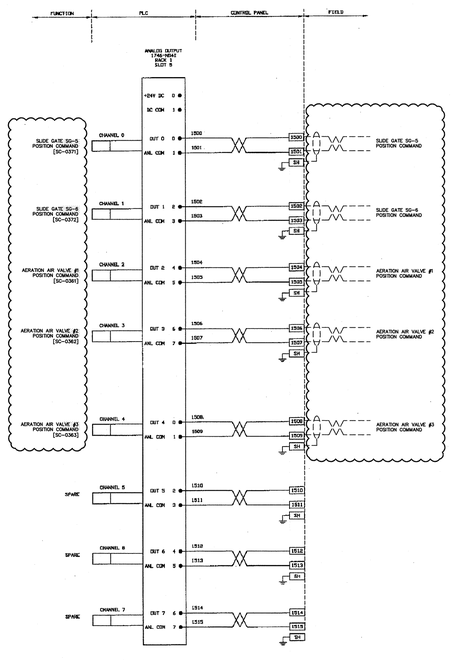

PLC I/O WIRING – ANALOG OUTPUTS

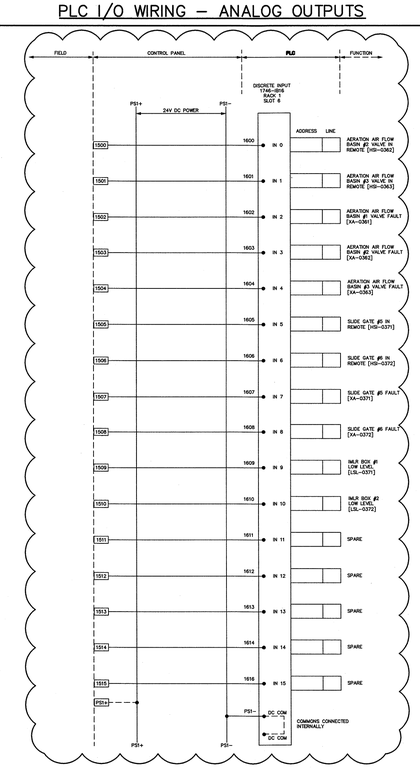

PLC I/O WIRING – DIGITAL INPUTS

NOTE:

ITEMS & ASSOCIATED WIRING SHOWN IN CLOUDED AREAS DESIGNED BY WOODARD & CURRAN. ALL ADDITIONAL COMPONENTS & WIRING SHOWN REPRESENT EQUIPMENT FROM A PREVIOUS DESIGN BY OTHERS.

1. ROTARY PRESS FEED PUMP #4 AND GRINDER #4 ARE PART OF BID ALTERNATE #3.

ISSUED FOR BID

980 Washington Street, Suite 325
Dedham, Massachusetts 02026
800.446.5518 | www.woodardcurran.com

COMMITMENT & INTEGRITY DRIVE RESULTS

WOODARD & CURRAN

THIS DOCUMENT IS THE PROPERTY OF WOODARD & CURRAN, INC. AND ITS CLIENT. REPRODUCTION OR MODIFICATION WITHOUT WRITTEN PERMISSION IS PROHIBITED.

COMMONWEALTH OF MASSACHUSETTS
JONATHON H. PRESCOTT
No. 48800
CONTROL SYSTEM
REGISTERED PROFESSIONAL ENGINEER
9-23-16

REV	DESCRIPTION	DATE

DESIGNED BY: PS | CHECKED BY: JHG
DRAWN BY: RPM | I-303.dwg

ADVANCED TREATMENT BUILDING
EXISTING CONTROL PANEL (ATBCP)
PLC I/O MODIFICATIONS (SHEET 3 OF 4)

DEPARTMENT OF PUBLIC WORKS
NANTUCKET, MASSACHUSETTS

SURFSIDE WASTEWATER TREATMENT FACILITY UPGRADES

JOB NO.: 229123.00
DATE: SEPTEMBER 2016
SCALE: AS NOTED
SHEET: 114 OF 116

I-303

\\woodardcurran.net\shares\Projects\229123 Nantucket MA Surfside WWTF Upgrades 2015-2016\wip\Drawings\I&C\Control Panels\Existing Panel Modifications\I-303.dwg, Sep 20, 2016 - 3:58pm

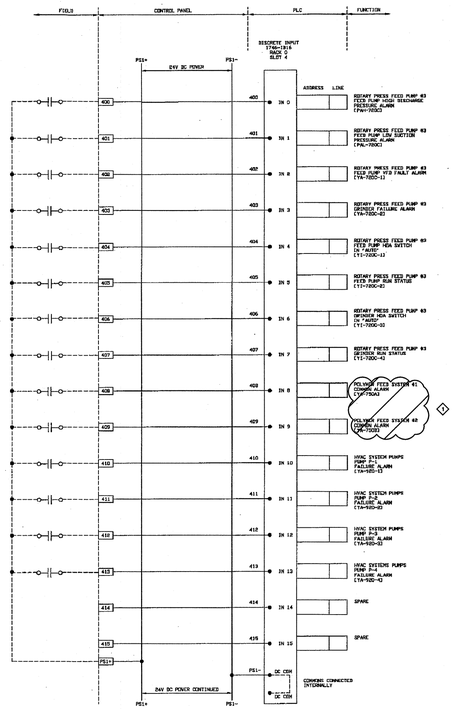

PLC I/O WIRING – DISCRETE INPUTS

NOTE:

ITEMS & ASSOCIATED WIRING SHOWN IN CLOUDED AREAS DESIGNED BY WOODARD & CURRAN. ALL ADDITIONAL COMPONENTS & WIRING SHOWN REPRESENT EQUIPMENT FROM A PREVIOUS DESIGN BY OTHERS.

1. POLYMER BLENDING SYSTEM IS PART OF BID ALTERNATE #2. IF BID ALTERNATE #2 NOT SELECTED EXISTING POLYMER SYSTEM TO REMAIN IN SERVICE.

ISSUED FOR BID

WOODARD & CURRAN
980 Washington Street, Suite 325
Dedham, Massachusetts 02026
800.446.5518 | www.woodardcurran.com
COMMITMENT & INTEGRITY DRIVE RESULTS

THIS DOCUMENT IS THE PROPERTY OF WOODARD & CURRAN INC. AND ITS CLIENT. REPRODUCTION OR MODIFICATION WITHOUT WRITTEN PERMISSION IS PROHIBITED.

COMMONWEALTH OF MASSACHUSETTS
JONATHON H. LAGRANT
CONTROL SYSTEM
No. 49800
REGISTERED PROFESSIONAL ENGINEER
9-23-16

REV	DESCRIPTION	DATE

DESIGNED BY: PS
DRAWN BY: SK
CHECKED BY: JHG
I-303.dwg

ADVANCED TREATMENT BUILDING
EXISTING CONTROL PANEL (ATBCP)
PLC I/O MODIFICATIONS (SHEET 4 OF 4)

DEPARTMENT OF PUBLIC WORKS
NANTUCKET, MASSACHUSETTS

SURFSIDE WASTEWATER TREATMENT FACILITY UPGRADES

JOB NO.: 229123.00
DATE: SEPTEMBER 2016
SCALE: AS NOTED
SHEET: 115 OF 116

I-304

22x34 SHEET
1:1

\\woodardcurran.net\shared\Projects\229123 Nantucket MA Surfside WWTF Upgrades 2015-2016\wip\Drawings\I&C\Control Panels\Existing Panel Modifications\I-303.dwg, Sep 20, 2016 - 3:58pm

ITEM	TAG	DESCRIPTION	NAMEPLATE
1	– – –'	NAMEPLATE	SLUDGE PROCESSING
2	– – –	– – –	– – –
3	– – –	DISTRIBUTION BLOCK	– – –
4	SA-1	SURGE ARRESTER-PN-POWER	– – –
5	PER DWGS	CIRCUIT BREAKERS	– – –
6	– – –	– – –	– – –
7	PER DWGS	TERMINAL BLOCKS – 120V AC	– – –
8	PER DWGS	POWER SUPPLY – 24V DC	– – –
9	PER DWGS	TERMINAL BLOCKS – 24V DC	– – –
10	PER DWGS	CONTROL RELAYS	– – –
11	PER DWGS	TERMINAL BLOCKS – I/O	– – –
12	R-1	RECEPTACLE	UPS ONLY
13	– – –	UNINTERRUPTIBLE POWER SUPPLY	– – –
14	SLC 5/05	PROGRAMMABLE LOGIC CONTROLLER	– – –
15	R-2	GFI	– – –
16	– – –	– – –	------
17	– – –	– – –	=========
18	– – –	FIBER OPTIC PATCH PANEL	– – –
19	– – –	FO/ETH SWITCH	– – –

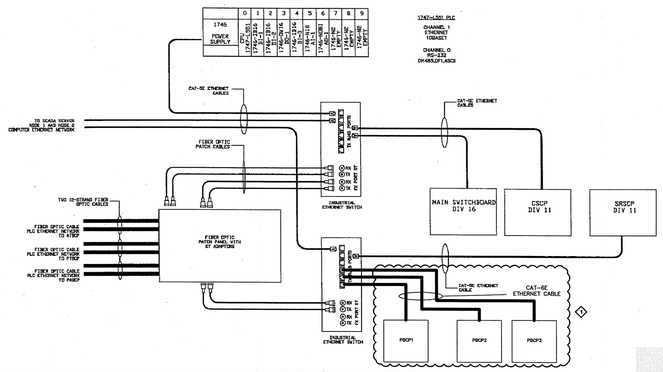

PLC I/O WIRING – DISCRETE INPUTS

NOTE:

ITEMS & ASSOCIATED WIRING SHOWN IN CLOUDED AREAS DESIGNED BY WOODARD & CURRAN. ALL ADDITIONAL COMPONENTS & WIRING SHOWN REPRESENT EQUIPMENT FROM A PREVIOUS DESIGN BY OTHERS.

1. POLYMER BLENDING SYSTEM IS PART OF BID ALTERNATE #2. IF BID ALTERNATE #2 NOT SELECTED EXISTING POLYMER SYSTEM TO REMAIN IN SERVICE.

ISSUED FOR BID

980 Washington Street, Suite 325
Dedham, Massachusetts 02026
800.446.5518 | www.woodardcurran.com

WOODARD & CURRAN

COMMITMENT & INTEGRITY DRIVE RESULTS

THIS DOCUMENT IS THE PROPERTY OF WOODARD & CURRAN INC. AND ITS CLIENT. REPRODUCTION OR MODIFICATION WITHOUT WRITTEN PERMISSION IS PROHIBITED.

COMMONWEALTH OF MASSACHUSETTS
JOHN A. HAGGERTY
CONTROL SYSTEM
No. 48600
REGISTERED PROFESSIONAL ENGINEER
9-23-16

REV	DESCRIPTION	DATE

DESIGNED BY: PS
DRAWN BY: SK
CHECKED BY: JHG
I-303.dwg

SLUDGE PROCESSING CONTROL PANEL
(SPBCP) PLC I/O MODIFICATIONS
(SHEET 1 OF 1)

DEPARTMENT OF PUBLIC WORKS
NANTUCKET, MASSACHUSETTS

SURFSIDE WASTEWATER TREATMENT FACILITY UPGRADES

JOB NO.: 229123.00
DATE: SEPTEMBER 2016
SCALE: AS NOTED
SHEET: 116 OF 116

I-401

22x34 SHEET
1:1

\\woodardcurran.net\shared\Projects\229123 Nantucket MA Surfside WWTF Upgrades 2015-2016\wip\Drawings\I&C\Control Panels\Existing Panel Modifications\I-303.dwg, Sep 20, 2016 – 3:59pm