Children's Beach Stormwater Pumping Station Evaluation

Town of Nantucket DPW

Nantucket, Massachusetts

May 2019

FUSS & O'NEILL

1550 Main Street, Suite 400
Springfield, MA 01103

Table of Contents

Children's Beach Stormwater Pumping Station Evaluation
Town of Nantucket DPW

1 Executive Summary 1

2 Background 1
- 2.1 Children's Beach Pumping Station Description 1
- 2.2 Pumping Station Operation 2
- 2.3 Initial Startup Failures 2
- 2.4 2011 Pumping Station Modifications 2

3 Basemapping 3
- 3.1 Field Survey 3
- 3.2 Datum Coordination 3

4 Site Visit Results 4

5 Forensic System Evaluation 5
- 5.1 Initial Pump Curve Evaluation 5
- 5.2 Effects of Check Valves Which Weren't Installed 5
- 5.3 Wet Well and Discharge Chamber Inadequate Sizing 6
- 5.4 Inadequate Ventilation for Pumps 6
- 5.5 Required Motor Horsepower 6

6 Preliminary Recommendations 7

7 Next Steps 7

Tables **Page**

1 Nantucket Datum Conversions 4

Figures **Page**

1 Children's Beach Pumping Station Surcharge October 2009 2
2 Children's Beach Pumping Station Bypass Pump – 2019 4
3 Tube Style Axial Pump 5
4 Missing Check Valves on Pump Discharge Pipes 5
5 Variable Frequency Drives - Installed 2011 6
6 Tide Gate at Harborview Way 7

Table of Contents

Children's Beach Stormwater Pumping Station Evaluation
Town of Nantucket DPW

Appendices **End of Report**

A C101 Survey Basemap
B C201/C301 Elevation of Piping Pump Station Drawing
C 40 HP Pump Curves
D Marked-up Application Range
E Public Presentation – March 14, 2019 – Nantucket Police Station

1 Executive Summary

The Town of Nantucket contracted with Fuss & O'Neill to conduct a limited evaluation of the Children's Beach Pumping Station system composed of the existing pumps, motors, controls, structure, piping and outfall which had been experiencing chronic operational issues and premature pump failure since its installation in 2009.

The forensic analysis conducted determined that the cause of the multiple premature pump failures was due to a number of design issues including inadequate venting, inadequate wet well and discharge chamber size, underpowered pumps, and overall turbulent stormwater feed to the pumps which adversely affected system hydraulics. The following sections of this report further detail the investigations conducted, results of the investigations and preliminary recommendations for improving the stormwater pumping station and overall system operating reliability to meet the Town's expectations.

2 Background

2.1 Children's Beach Pumping Station Description

The Children's Beach Pumping Station, located at the northwest corner of Children's Beach was installed in 2009, and is composed of an approximately 8 ft. 10-inch x 9 ft. x 18.0 feet deep concrete wet well with a 48-inch inlet gravity storm drain pipe and two tube style axial pumps (KSB Amacan PA 4 700-470/308XTG1). The axial pumps discharge through two @ 24-inch ductile iron force mains which discharge into a 7.5 ft x 9 ft x 7.25 ft high discharge chamber (floor of chamber ~ 11 feet below top of concrete), with the top slab at 6-12 inches above grade equipped with a 24-inch hatch.

Approximately 190 feet west of the pumping station (at the western end of the adjacent park) are located two panels which house the power and controls to operate the pumps and an electrical transformer. A manual transfer switch to accommodate a portable generator is affixed to the exterior of one of the panels. Normal operation of the pumps uses a pressure transducer to sense the water level, with the pump running on a VFD (Variable Speed Drive). Backup float switches can be used to start and stop the pump(s) if the VFD fails. (However, due to the configuration of the inlet and discharge system, we do not recommend that the floats be used.

A basis of design memorandum or calculations related to the pumping station both hydraulically and dimensionally were unable to be located by Town staff to determine the intent of the operational characteristics of the pumping station and what decisions were made during the design process. The evaluation provided herein is based upon our desktop evaluation of the materials provided by the Town, review of manufacturer's literature, field measurements and recording of equipment and structures at the site.

2.2 Pumping Station Operation

During gravity operation, stormwater from the pumping station wet well is discharged by gravity into an adjacent discharge chamber via two 36-inch duckbill valves, from which the stormwater flow continues through an approximately 480 foot long 48-inch gravity outlet pipe which drains by gravity to an outfall at the Marina Cove. The outfall discharge at Marina Cove is a penetration of an existing sheet pile retaining wall, the opening of which is currently a steel grate welded to the outlet to prevent large debris from damaging or entering the outfall.

During pumping events, the pumps convey stormwater through 2 very short 24-inch ductile iron pipes/force mains which discharge pressurized flow into the adjacent 7.5 ft x 9 ft x 7.25 ft high discharge chamber, which then empties through the 48-inch outfall at Marina Cove.

2.3 Initial Startup Failures

According to correspondence we received from the Town, the Children's Beach Pumping Station was commissioned in June 2009. In October 2009 the pumps experienced shut down during a storm event at high tide. A third party firm Blue Hills Hydraulics Inc. performed a review of the AECOM computational fluid dynamics (CFD) analysis of the Children's Beach stormwater pumping system in 2011. The limited study apparently didn't address the downstream head conditions created by the tidal changes, sediment loads, and the duckbill check valves within the discharge chamber.

Figure 1 - Children's Beach Pumping Station Surcharge October 2009

2.4 2011 Pumping Station Modifications

Modifications to the pumping station in 2011 included eight (8) @ 1-1/2-inch diameter vent holes with a 3/8-inch punched hole "screen" backing each hole which exposes the area of approximately 7 of these 3/8-inch holes drilled into the pumping station diamond plated hatch cover. The estimated open area of the 8 vent holes is 6.18 square inches (the equivalent of a clear 2.8 inch diameter vent hole). The installation of a concrete slab for the pumping station wet well cover was also completed at this time. In addition, Variable Frequency Drives (VFDs) were installed with a goal of mitigating the water hammer associated with these frequent "impulse" starts and stops which were reportedly causing electrical power overloads and premature pump wear. Lastly, the burned out pump motors were rehabilitated at First Electric Motor Service in Woburn, MA.

In the hydraulic report issued by Blue Hills Hydraulics dated May 18, 2011 a sketch of the pumping station wet well and discharge chamber cross section was found with elevations based upon the Nantucket half-tide datum of 1934 (NHTD) and *Table 1* presented a conversion of the elevations to the

Nantucket Tidal Datum (NTD). Record drawings of the pumping station were included in the *Contract Drawings for Stormwater Improvements - Phase I - Contract 2006-1* dated April 2008 by EarthTech. A plan and profile of the associated downstream infrastructure was included in the record drawing set. It is noteworthy, however, that a junction chamber without pumps was depicted in the original design drawings at the location where the pumping station was constructed.

3 Basemapping

3.1 Field Survey

Field survey to collect locations and elevations of key components of the Children's Beach Stormwater system was conducted on October 10, 2018 by Nantucket Surveyors LLC. *Appendix A* (F&O Drawing C-101) depicts the survey basemap. Basemapping was prepared using AutoCAD Civil 3D software and contours depicted at one foot intervals.

Nantucket Surveyors performed a field topographic and utility survey to create a base map for the existing storm water pump station and storm drainage infrastructure and along the route of the discharge pipe location to the outfall in the Marina Cove.

Horizontal control for the survey is based upon the North American Datum of 1983 (NAD 83) and vertical control is based on the North American Vertical Datum of 1988 (NAVD 88). A minimum of 2 permanent control points and benchmarks were set, one in the bituminous pavement at a point approximately midway along and adjacent to the timber wall that runs between the pump station and the tide gate for the boat ramp, and the other in the middle of the bituminous sidewalk that runs from the pump station to the play area, near the south end of the sidewalk in front of the play area..

The field survey located the following features: walls, fences, buildings, structures, driveways, edge of pavement, edge of parking, walks, visible signs of utilities, the sinkhole location along the bituminous walkway at Children's Beach, top of frame and invert elevations of storm and sanitary structures including two hydrodynamic separators by Aquaswirl – Model AS-8 (referred to as stormwater BMPs in the record drawings for the construction project), manholes, and the outfall pipe in the Marina Cove.

3.2 Datum Coordination

When considering elevations at or near sea level with relatively flat surrounding topography it is critical to record elevation data on a common datum. Nantucket is unique because information may be presented on Nantucket half-tide datum of 1934 (NHTD), Nantucket Tidal Datum (NTD), North American Vertical Datum of 1988 (NAVD 88), or MLLW (Mean Lower Low Water) which was used by NOAA. Table 1 shows the correlation of the various datum, which is critical when evaluating the interior drainage or discharge hydraulic impacts on the gravity and pumping components of the stormwater discharge system.

Table 1
Nantucket Datum Conversions

From : https://tidesandcurrents.noaa.gov/benchmarks/8449130.html	(meters)	(feet)	NAVD 88	check diffo
HIGHEST OBSERVED WATER LEVEL (10/30/1991) = 2.398	2.398	7.87	**5.77**	-2.09
MEAN HIGHER HIGH WATER MHHW = 1.089	1.089	3.57	**1.48**	-2.09
MEAN HIGH WATER MHW = 0.986	0.986	3.23	**1.14**	-2.09
North American Vertical Datum (NAVD88)		2.09	**0**	-2.09
MEAN SEA LEVEL MSL = 0.539	0.539	1.77	**-0.33**	-2.09
MEAN TIDE LEVEL MTL = 0.523	0.523	1.72	**-0.38**	-2.09
MEAN LOW WATER MLW = 0.061	0.061	0.20	**-1.89**	-2.09
MEAN LOWER LOW WATER MLLW = 0.000	0	0.00	**-2.09**	-2.09
LOWEST OBSERVED WATER LEVEL (02/12/1981) = -0.653	-0.653	-2.14	**-4.24**	-2.09

per Paul Santos ....
Nantucket used to be on the 1/2 Tide of 1934 datum.
There is a 1.4 diffo between the 1/2 Tide of 1934 datum and the NAVD88
1/2 Tide of 1934 Datum Elevation MINUS 1.4 = NAVD88 Elevation

4 Site Visit Results

Two site visits were conducted on June 27th, and October 10th, 2018 to collect existing information regarding the pumping system including the pumping chamber, discharge chamber, elastomeric duckbill check valves, appurtenances, electrical and controls, sequence of operations and overall pumping system and hydraulics information. *Appendix B* shows two drawings. The first drawing is the cross-section of the pumping system piping from the swirl concentrator through the pump station and ending at the discharge pipe at the sea wall near the marina. The second drawing shows the dimensioned plan and elevation views of the pumping station and discharge chamber.

Town staff provided the evaluation team to provide F&O access to enter the wet well/pump chamber and downstream discharge chamber and access to the electrical and control panels for confined space entry to create accurate record drawings of the system and observation of the system components. In addition, on the October 10, 2018 site visit, Town staff operated the Town's portable centrifugal stormwater pump system which had been temporarily installed above the pumping station to provide temporary/replacement pumping and on October 10th allowed observation and inspection of the interior of the wet well, pumps and discharge chamber. During our inspection, as the tide rose, backflow into the wet well and the subsequently into the 48-inch inlet pipe from the BMP's in Harbor View Way.

Figure 2 - Children's Beach Pumping Station Bypass Pump - 2019

During the visit, Town staff also provided access for F&O to observe and record the nameplate data from one of the recently repaired KSB axial pumps which has been stored at the DPW since having the motor repaired.

5 Forensic System Evaluation

Figure 3 - Tube Style Axial Pump

Information for the KSB axial pumps Model Amacan PA 4 700-470/308XTG1 were provided by the Town of Nantucket. The 40 hp pump curves (attached hereto as *Appendix C*) along with manufacturers' literature and recorded information gathered through survey and the site visits attached hereto were reviewed to gain insights into the chronic pump failures.

5.1 Initial Pump Curve Evaluation

It was apparent upon review of the pump curves provided by the Town, and later confirmed by Dan Weaver/KSB rep) that a rather small 5 foot total dynamic head (TDH) increase would reduce the flow and cause a pump overload condition (left side of curve overload - low flow, high head). Likewise, if the head was reduced below 3 feet TDH the pumps would "runout" off the curve and not perform. Due to the varying water inlet and outlet elevations, the pump would be called on to operate beyond the so called "application range" of the pump curve. The head characteristics vary on the upstream (suction side) of the pumps due to varying intensities and flows common to storm events. The head characteristics vary on the downstream (discharge side) of the pumps due to tidal fluctuations and turbulence in the discharge chamber. In conjunction with each other, a condition is created where the pumps operating point would rapidly shift from one side of the curve to the other. This operational range led to motor overload (and motor failure due to overheating). This condition was exacerbated by the lack of adequate venting of the wet well/pump and discharge chambers.

5.2 Effects of Check Valves Which Weren't Installed

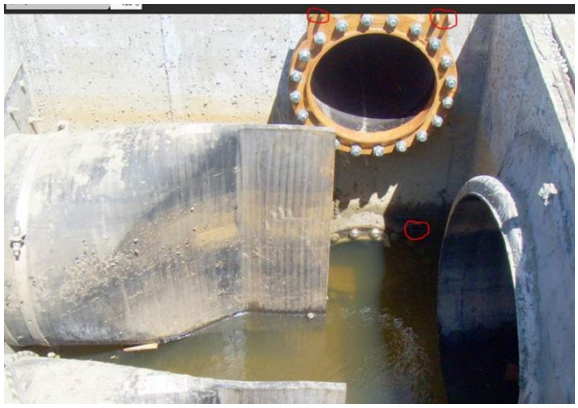

Figure 4 - Missing Check Valves on Pump Discharge Pipes

In addition, the check valves which were designed for installation on the discharge side of the 2 @ 24-inch force main pipes leading to the discharge chamber weren't installed, which allowed tidal waters to travel backward into the pump chamber when the pumps were not running. This situation would likely turn the pump impellers in the backward direction, creating undesirable need to overcome the rotational direction change when a motor is called to run and pump the stormwater. This situation is further intensified when one pump is running, causing a large magnitude of backflow in the other pump, which if started when the impeller is spinning backwards magnifies the burden on the motor during the start.

5.3 Wet Well and Discharge Chamber Inadequate Sizing

Most importantly, however, was the inadequate sizing and configuration of the pumping station inlet works, wet well, discharge chamber and discharge pipe, along with inadequate venting (which sends false/inaccurate water level readings to the pumps from the pressure transducer style level probe which created an intractable turbulent, and frequently intermittent flow condition which created excessive vibration and overloading of the pumps. It was apparent by consulting the manufacturer's design and installation guide that inadequate length was provided upstream of the tube style axial pumps. Adequate baffling and proper introduction of the inlet flow as it plunges into the wet well to assure a reasonably uniform non-swirling velocity profile into the pump was also lacking. These flow straightening features are typically requirement of all propeller style flow axial pumps, regardless of manufacturer. The pumps were provided with a suction umbrella to prevent air from vortex entrainment into the pump impeller, as well as a "half the required height" flow straightening vane under the inlet of both pumps. However, absent the other requirements and an overall design which kept the pump operating on the "application range", the pump(s) failed. *Appendix D* shows the pump curve with the manufacturer's recommended application range and the estimated extent that the Children's Beach pumps operate outside of the application range.

5.4 Inadequate Ventilation for Pumps

The 8 @ 1-1/2 inch vent holes drilled into the wet well inlet hatch with a 3/8-inch punched hole "screen" backing each hole in 2011 intended to provide make up ventilation to the pumps and equalize the pressures but they were woefully undersized. The estimated open area of the 8 @ 1-1/2 inch vent holes is 6.18 square inches (the equivalent of a clear 2.8 inch diameter vent hole).

5.5 Required Motor Horsepower

The Yaskawa VFDs which were installed in 2011 were installed at a considerable distance (approximately 190 feet, and over 200 ft as the wire runs) from the pumps which may have caused nuisance trips and pump damage due to the lack of appropriate cabling and protective electrical components). Both the motor and VFD manufacturer should be consulted for a coordinate4d evaluation and design.

Figure 5 - Variable Frequency Drives - Installed 2011

Most importantly, according to manufacturer's recommendations, the pump motors should have been increased by 4 Hp for the initial installation based upon the anticipated stormwater flow characteristics. Addition of the VFDs should have increased the pump horsepower by another 6 Hp to accommodate the additional power reserve requirement. . Therefore, the pump horsepower should have been had a minimum of 50 Hp motor, not the 40 Hp motor which was provided for the pumping station.

6 Preliminary Recommendations

The scope of this evaluation didn't include detailed recommendations for long term reliability of the Children's Beach Pumping Station under varying upstream flows and future sea level rise and increased rainfall intensities. To add further complexity, the impacts of the upstream swirl separator (aka BMP's) and watershed hydraulics have not been fully analyzed through a comprehensive hydrologic and hydraulic (H&H) study. Given the narrow scope of services, however, it is evident that several options exist to improve the short term effectiveness of the Children's Beach Pumping Station and minimize the need to repair and replace the existing axial pumps. Preliminary pumping station improvements for consideration include the following:

- Increase the Footprint/Volume of Wet Well
- Separate and Increase the Footprint/Volume of Discharge Chamber
- Improve Flow Feed to Wet Well
- Consider Projected SLR and Climate Change Impacts
- Change from Axial to Centrifugal Pumps
- Increase Pump Horsepower
- Increase/Improve Ventilation
- Add appropriate electrical components to prevent motor damage due to long distance between VFD and pump motor
- Evaluate BMP Effects on Flow Feed

These preliminary recommendations were briefly discussed during a public presentation held at Nantucket Police Station on March 14, 2019. A copy of the presentation is attached hereto as *Appendix E*.

7 Next Steps

The recommended next step includes a pilot watershed study of the upstream Children's Beach watershed to hydrologically and hydraulically model the upstream watershed to determine the upstream flows to the pumping station, their velocities, volumes, attenuation and durations.

Figure 6 - Tide Gate at Harborview Way

Appendix A

C101 Survey Basemap

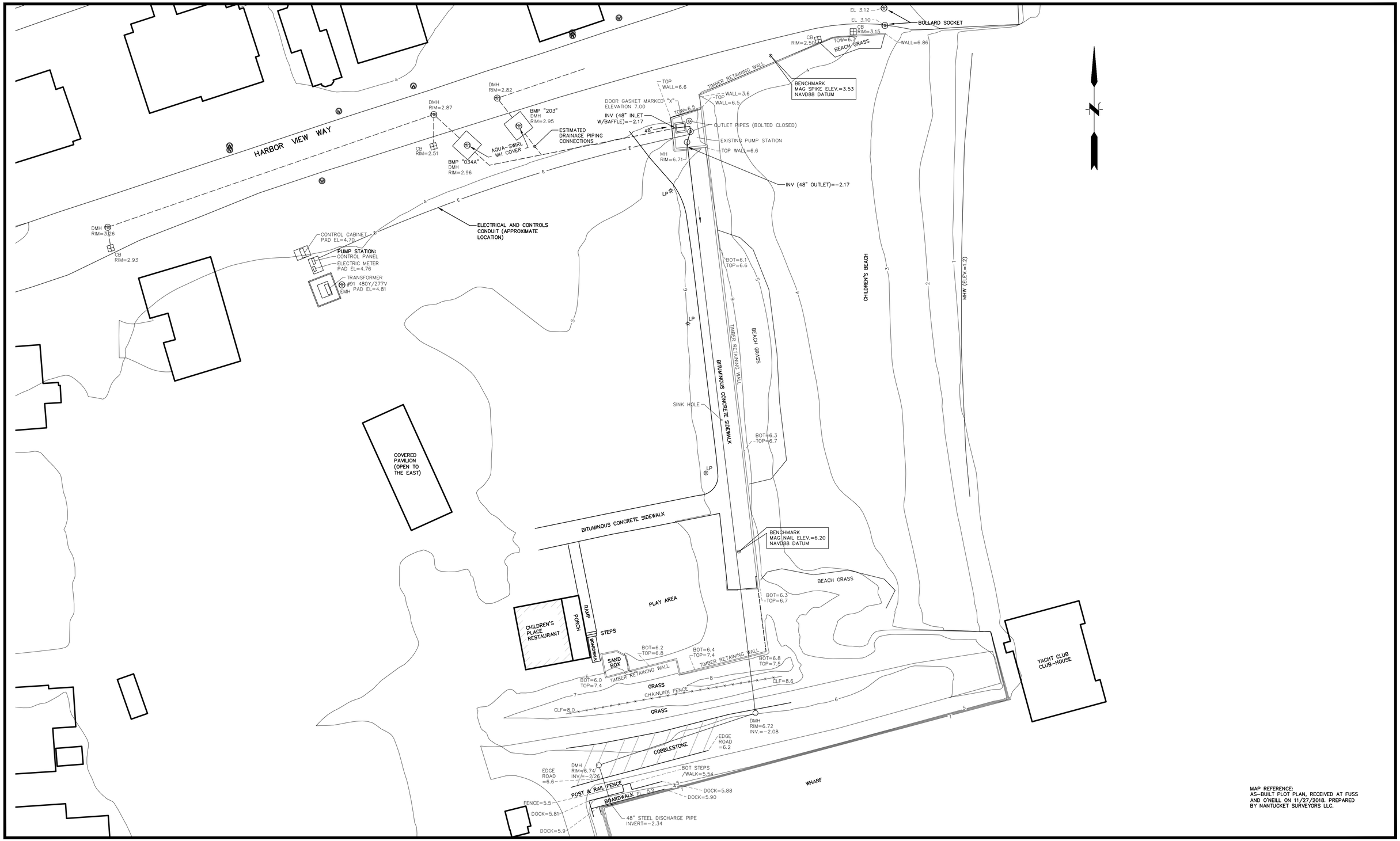

MAP REFERENCE:
AS-BUILT PLOT PLAN, RECEIVED AT FUSS AND O'NEILL ON 11/27/2018. PREPARED BY NANTUCKET SURVEYORS LLC.

File Path: J:\DWG\P\20171100\S10\MEP\Civil Utilities\20171100S10_CU101.dwg Layout: CU101 Plotted: Wed, March 13, 2019 - 11:46 AM User: fcaricchio
Plotter: AUTOCAD PDF (GENERAL DOCUMENTATION).PC3 CTB File: FO.STB
LAYER STATE:
MS VIEW:

No.	DATE	DESCRIPTION	DESIGNER	REVIEWER
1.				

SEAL

SEAL

SCALE:
HORZ.: 1" = 20'
VERT.:
DATUM:
HORZ.: NAD 83
VERT.: NAVD 88
20 10 0 20
GRAPHIC SCALE

FUSS & O'NEILL
108 MYRTLE STREET, SUITE 502
QUINCY, MA 02171
617.282.4675
www.fando.com

TOWN OF NANTUCKET, MASSACHUSETTS

TOPOGRAPHIC AND UTILITY SURVEY

CHILDREN'S BEACH STORMWATER
PUMPING STATION EVALUATION

NANTUCKET MASSACHUSETTS

PROJ. No.: 20171100.S10
DATE: 03/14/2019

CU-101

Appendix B

C-201 Cross-Section of the Pumping System Piping

C-301 Plan and Elevation Views of the Pumping Station and Discharge Chamber

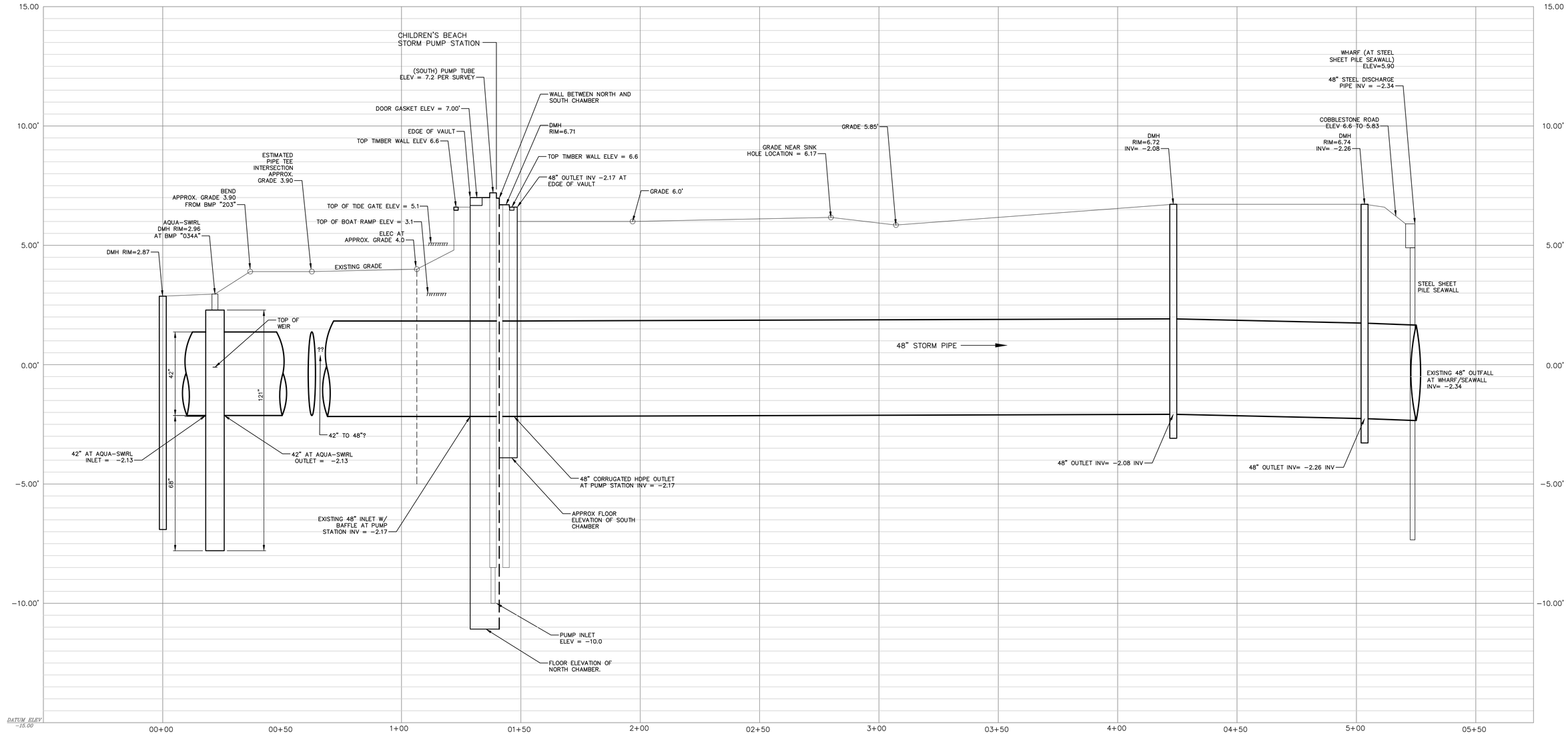

1 BMP "SWIRL CONCENTRATOR" TO STORM PUMP STATION TO DISCHARGE AT HARBOR

HORIZONTAL SCALE: 1" = 20'
VERTICAL SCALE: ½" = 1'-0"

No.	DATE	DESCRIPTION	DESIGNER	REVIEWER
1.				

SEAL

SEAL

SCALE:
HORZ.: AS SHOWN
VERT.:
DATUM:
HORZ.:
VERT.: NAVD 88
4 2 0 4
GRAPHIC SCALE

FUSS & O'NEILL
108 MYRTLE STREET, SUITE 502
QUINCY, MA 02171
617.282.4675
www.fando.com

TOWN OF NANTUCKET, MASSACHUSETTS

EXISTING CHILDREN'S BEACH STORM PUMP STATION DETAILS

CHILDREN'S BEACH STORMWATER PUMPING STATION EVALUATION

NANTUCKET MASSACHUSETTS

PROJ. No.: 20171100.S10
DATE: 03/14/2019

CU-201

File Path: J:\DWG\P2017\1100\S10\MEP\Civil Utilities\20171100S10_ PRF01.dwg Layout: CU201 Plotted: Wed, March 13, 2019 - 11:46 AM User: fcaricchio
Plotter: AUTOCAD PDF (GENERAL DOCUMENTATION).PC3 CTB File: FO.STB
LAYER STATE:
MS VIEW:

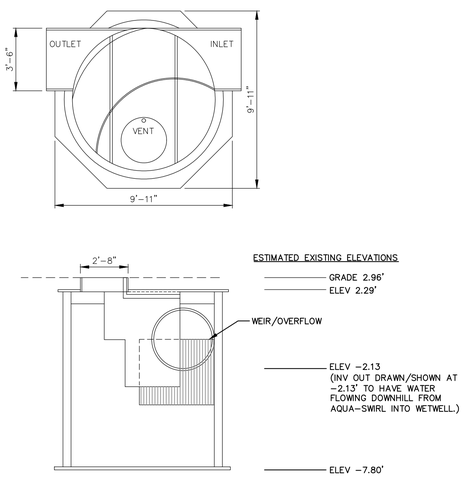

1 BMP SWIRL CONCENTRATOR
1/4" = 1'-0"

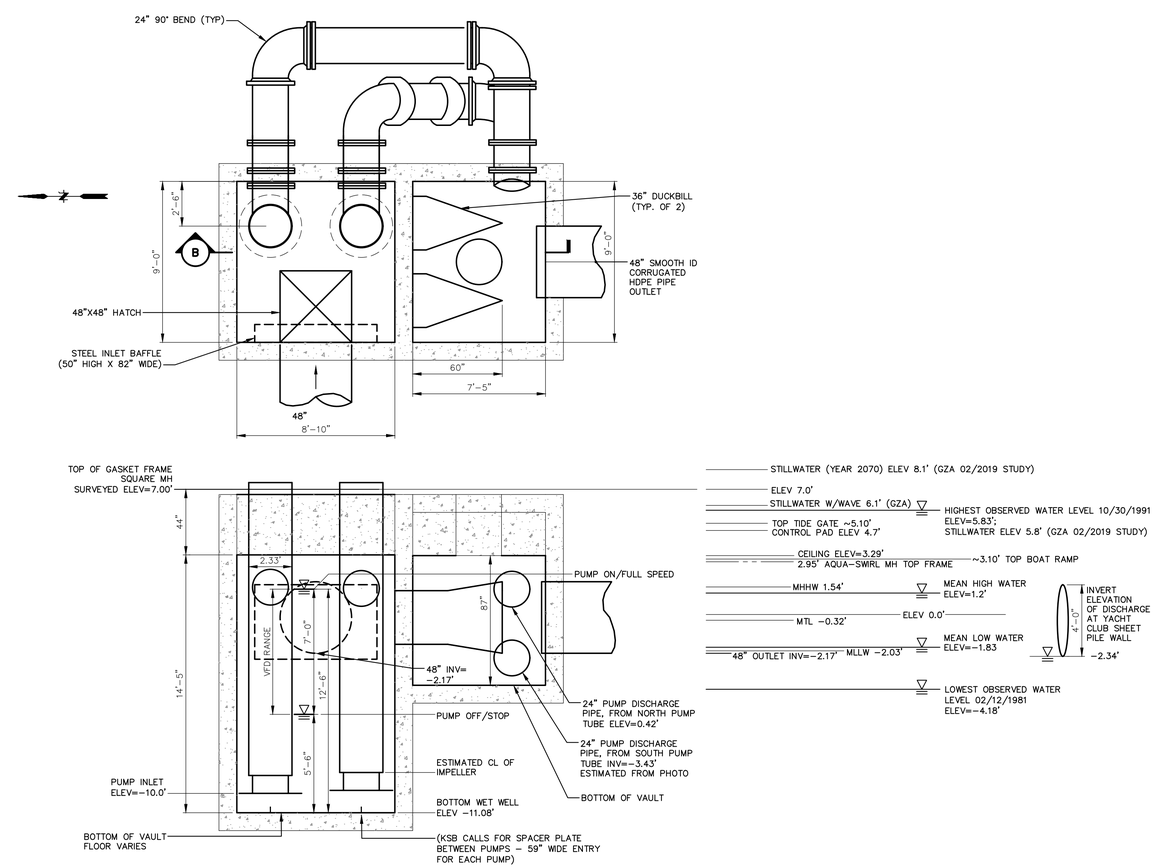

2 PUMP STATION PLAN & ELEVATION (LOOKING EAST)
1/4" = 1'-0"

File Path: J:\DWG\P20171100\S10\MEP\Civil Utilities\20171100S10_CU301.dwg Layout: CU301 Plotted: Wed, March 13, 2019 - 11:46 AM User: fcaricchio Plotter: AUTOCAD PDF (GENERAL DOCUMENTATION).PC3 CTB File: FO.STB
LAYER STATE:
MS VIEW:

No.	DATE	DESCRIPTION	DESIGNER	REVIEWER
1.				

SEAL

SEAL

SCALE:
HORZ.: AS SHOWN
VERT.:
DATUM:
HORZ.:
VERT.: NAVD 88
4 2 0 4
GRAPHIC SCALE

FUSS & O'NEILL
108 MYRTLE STREET, SUITE 502
QUINCY, MA 02171
617.282.4675
www.fando.com

TOWN OF NANTUCKET, MASSACHUSETTS
EXISTING CHILDREN'S BEACH STORM PUMP STATION DETAILS
CHILDREN'S BEACH STORMWATER PUMPING STATION EVALUATION
NANTUCKET MASSACHUSETTS

PROJ. No.: 20171100.S10
DATE: 03/14/2019

CU-301

Appendix C

KSB 40 HP Pump Curves

Performance curve

Pump type Amacan PA4 700-470/308XTG1

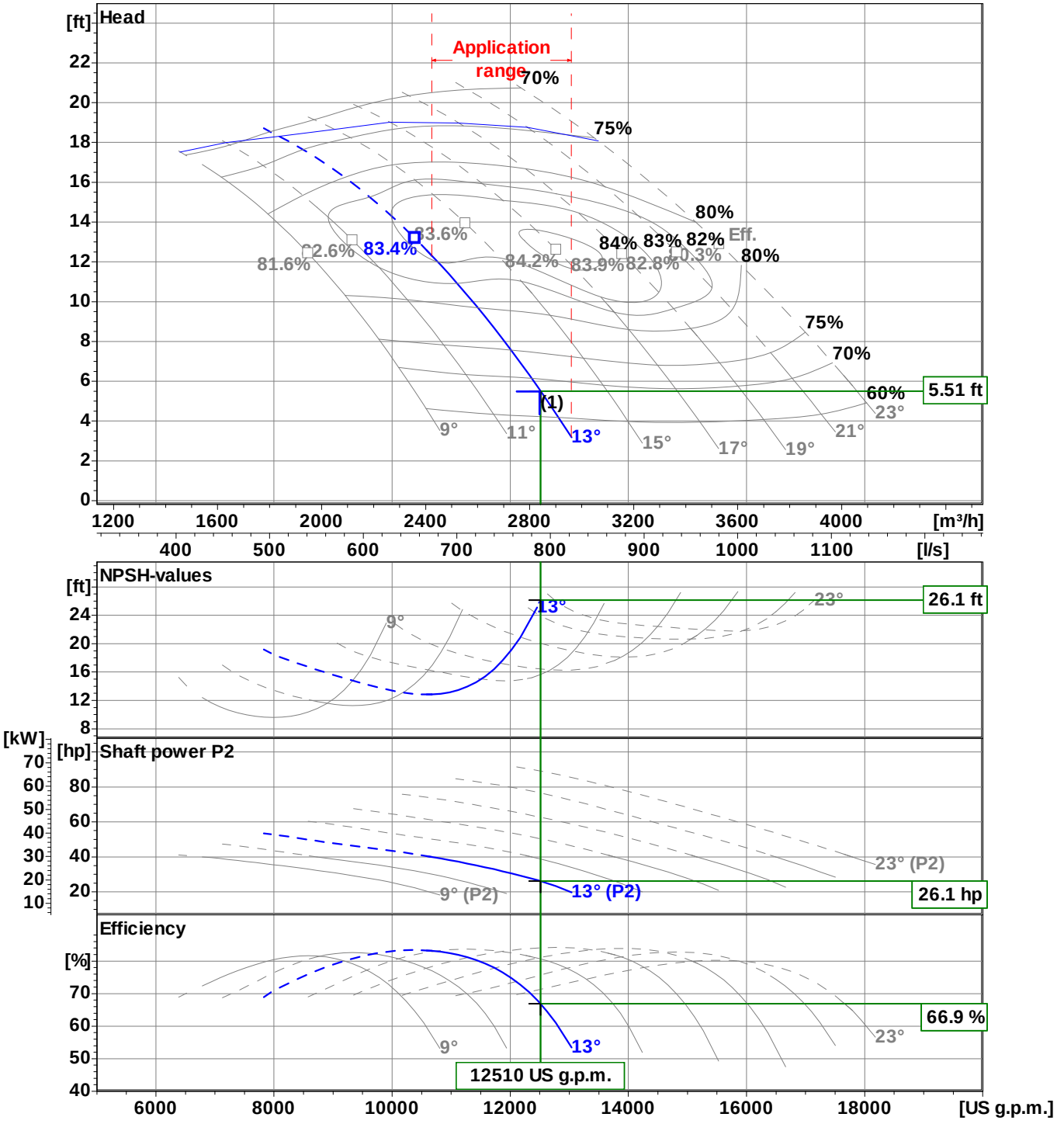

Impeller type	Axial propeller , Open			Curve number	K4200340/2
Free passage	3 inch	Density	62.322 lb/ft³	Frequency	60 Hz
Impeller size	18 1/2"	Viscosity	1.082E-5 ft²/s	Speed	880 1/min

Appendix D

KSB 40 HP Pump Curves
Marked-up Application Range

Project	Nantucket
Customer pos.no	
Project ID	Childrens Beach PS
Pos.no	
Created by	D. Weaver

2015-11-17

Performance curve

Pump type **Amacan PA4 700-470/308XTG1**

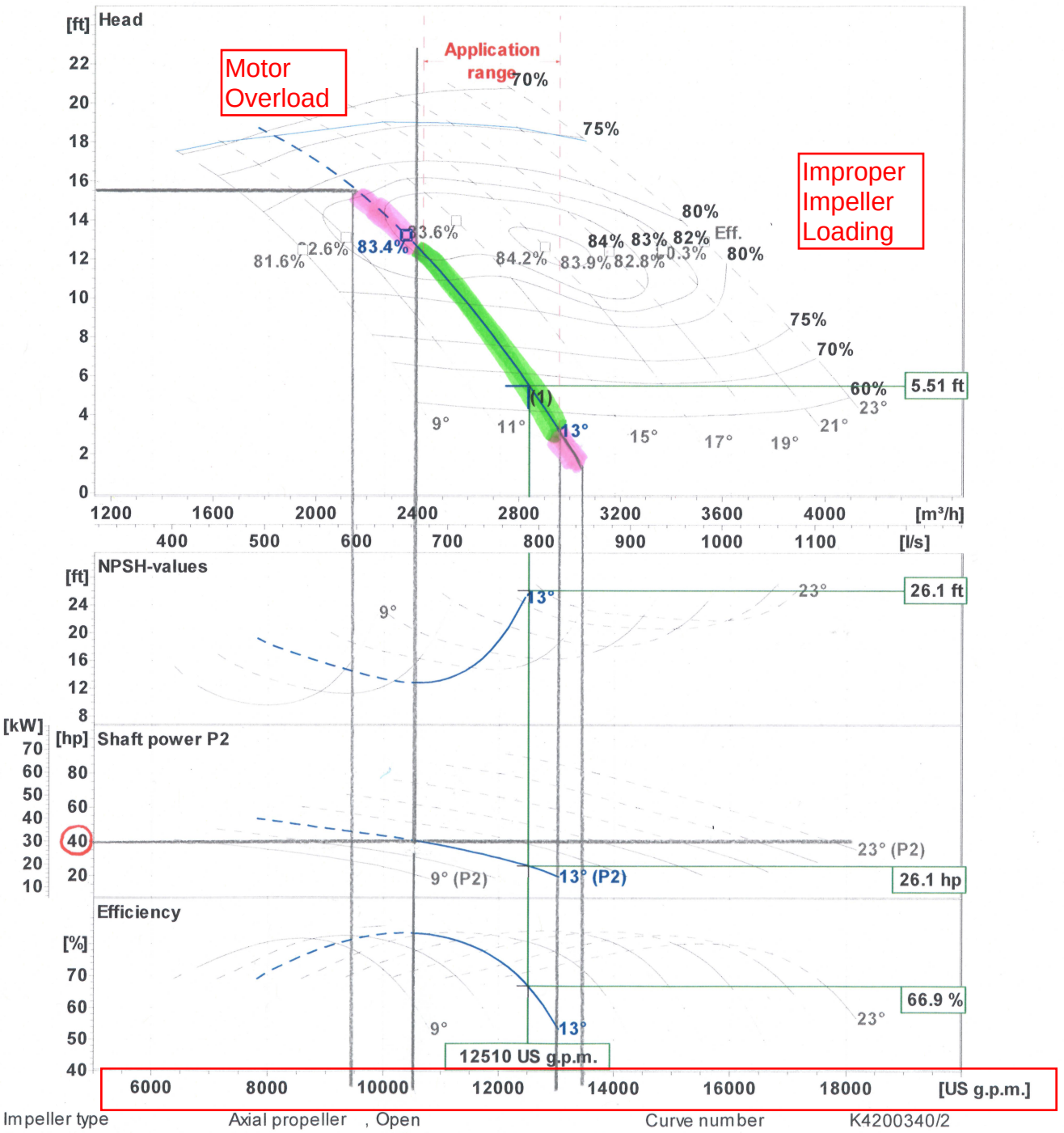

Impeller type	Axial propeller , Open			Curve number	K4200340/2
Free passage	3 inch	Density	62.322 lb/ft³	Frequency	60 Hz
Impeller size	18½"	Viscosity	1.082E-5 ft²/s	Speed	880 1/min

Appendix E

Public Presentation – March 14, 2019
Nantucket Police Station

FUSS & O'NEILL

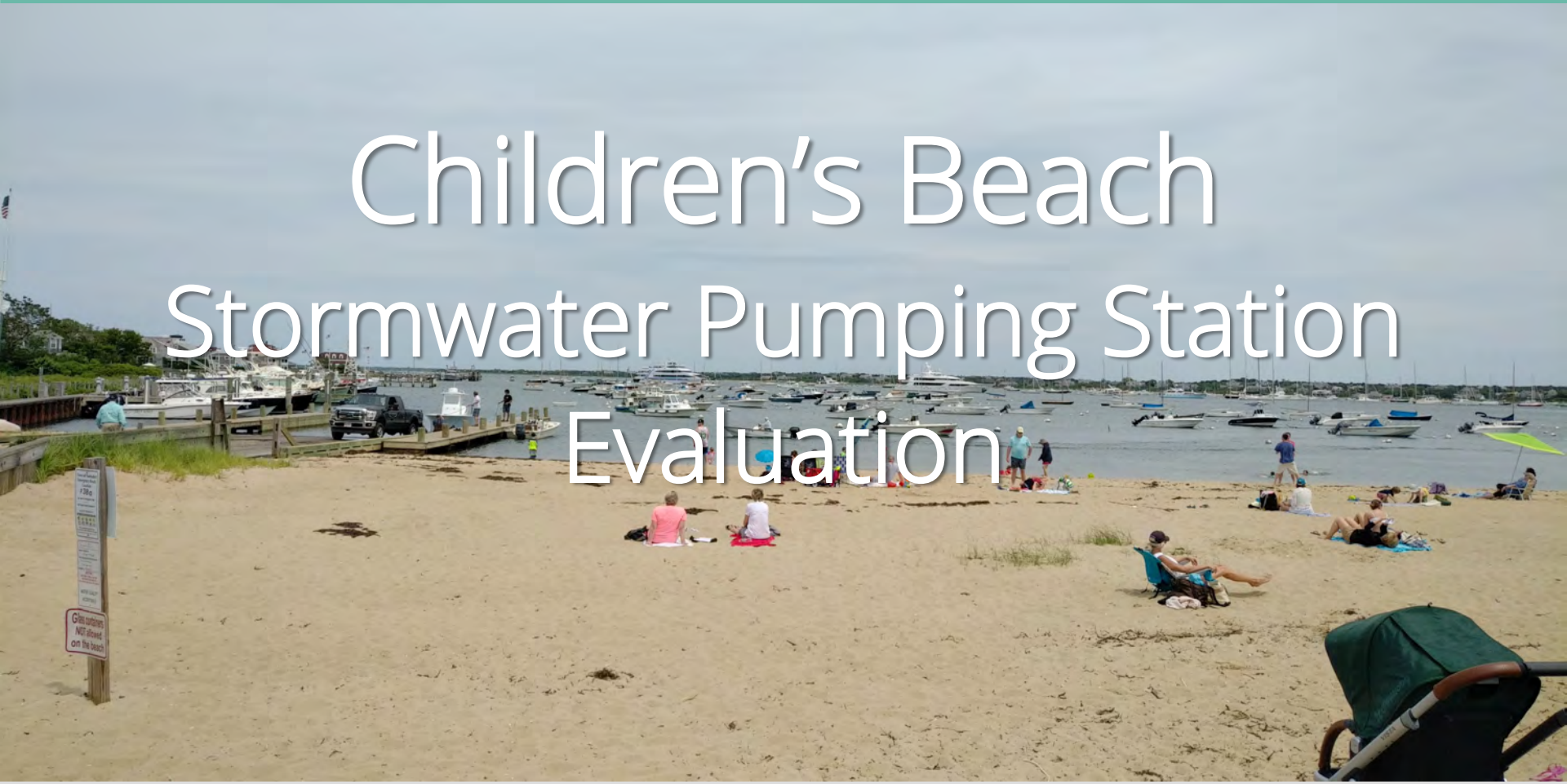

Children's Beach
Stormwater Pumping Station Evaluation

Public Meeting

Town of Nantucket

March 14, 2019

Meeting Agenda

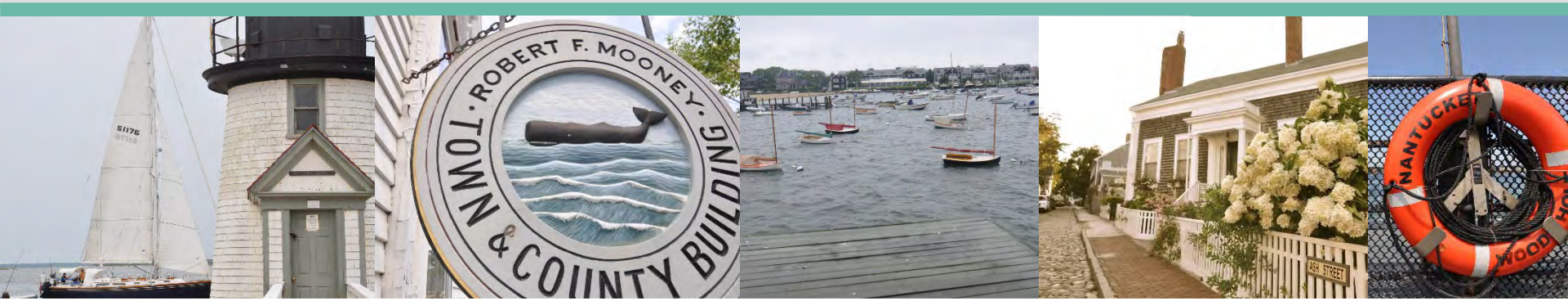

- Background
- Existing Conditions
- Pumping Scenarios
- Forensic Study Results
- Forensics Summary
- Pumping Station Repair Alternatives
- Discussion

FUSS & O'NEILL

Background - Children's Beach Flyover

Children's Beach Tour.kmz

FUSS & O'NEILL

Background – Initial Pumping Station Commissioning

- 2005 Children's Beach Outfall Evaluation –Improvements
  - *Brant Point SW Outfall Elimination*
  - *Brant Point SW Improvements*
  - *BMPs*
  - *Children's Beach Pumping Station*

FUSS & O'NEILL

Background

- Pumping Station Commissioned June 2009
  - Part of Children's Beach Outfall Evaluation - 2005
  - KSB 40 Hp Amacan Axial Pumps
  - Small Wet Well
  - Small Discharge Chamber

Background – Pumping Station Plan & Elevation

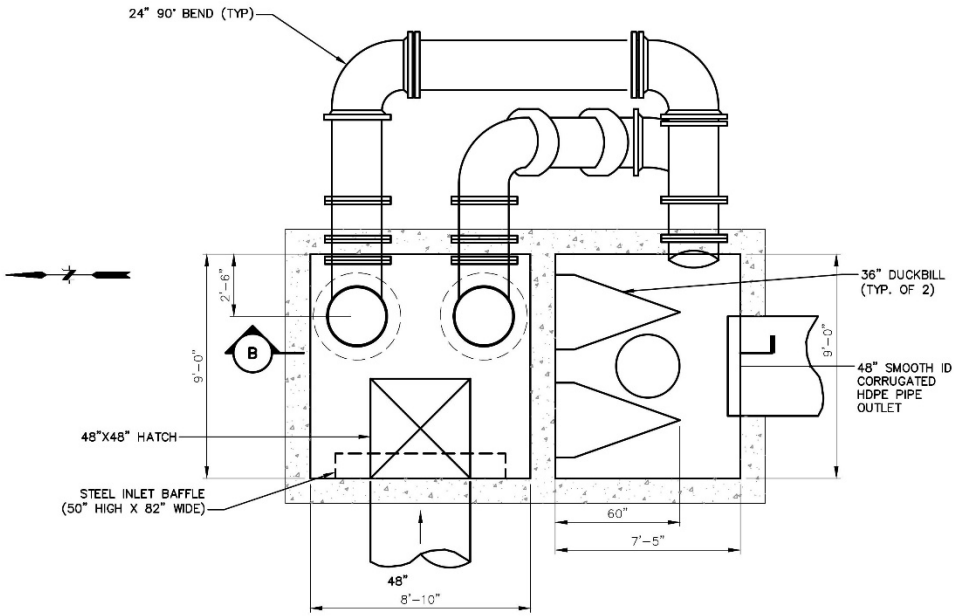

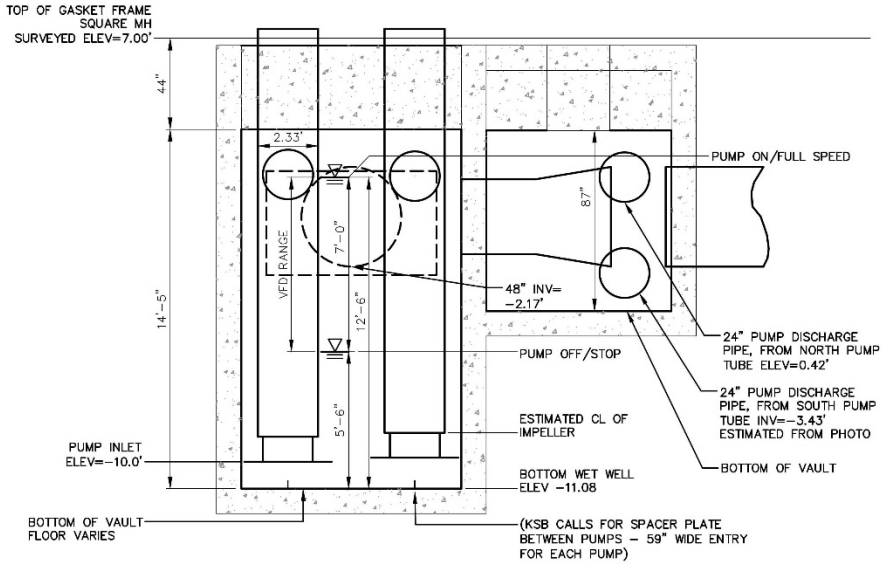

FUSS & O'NEILL

Background – Initial Pump Failure/Improvements

- Initial Failure Oct. 2009
- Hydraulic Evaluation 2011 Results
- Recommended 2011 Improvements
  - Improved Venting
  - Pump Repairs
  - VFDs

Existing Conditions – Pumping Station Area Survey

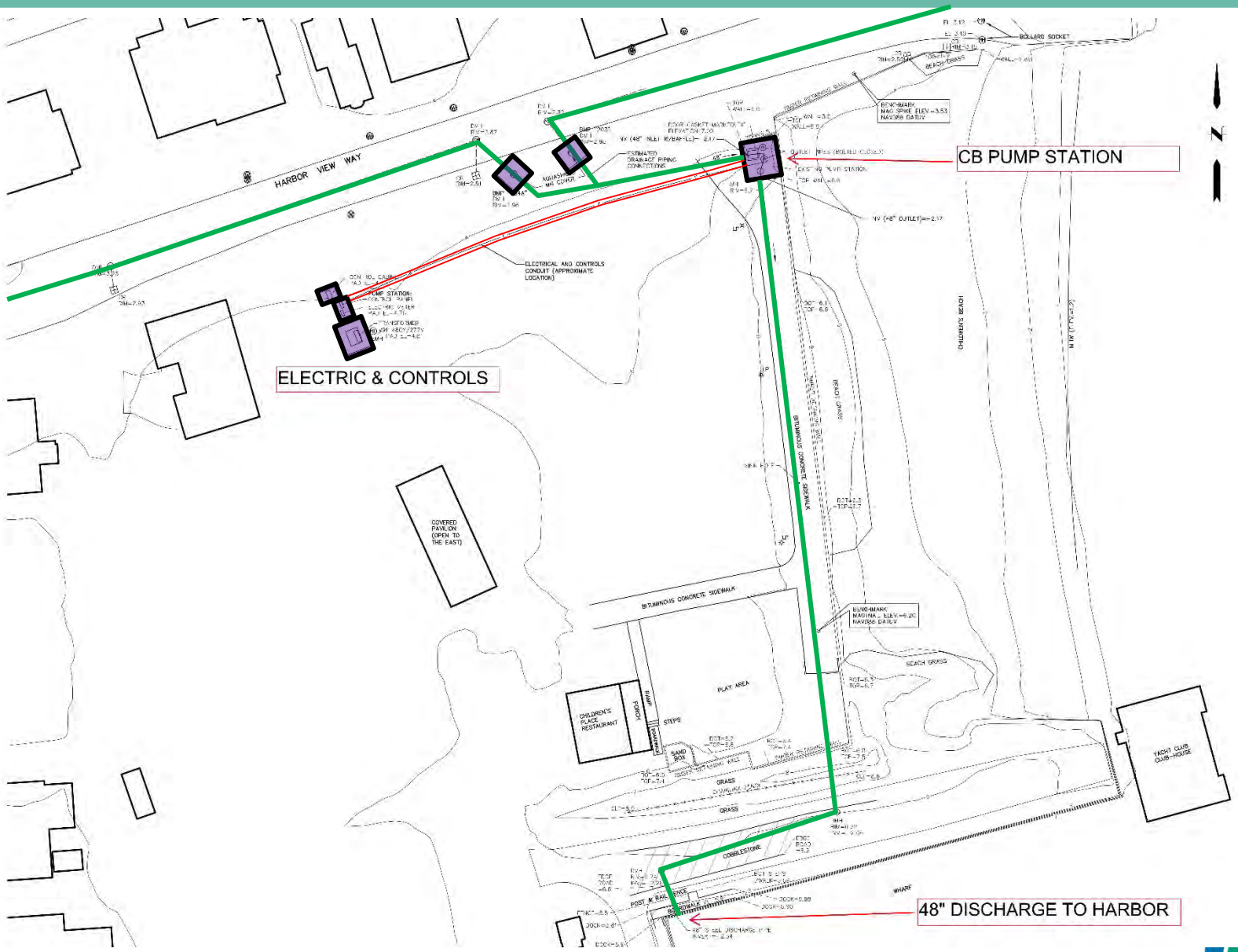

FUSS & O'NEILL

Existing Conditions – System Profile

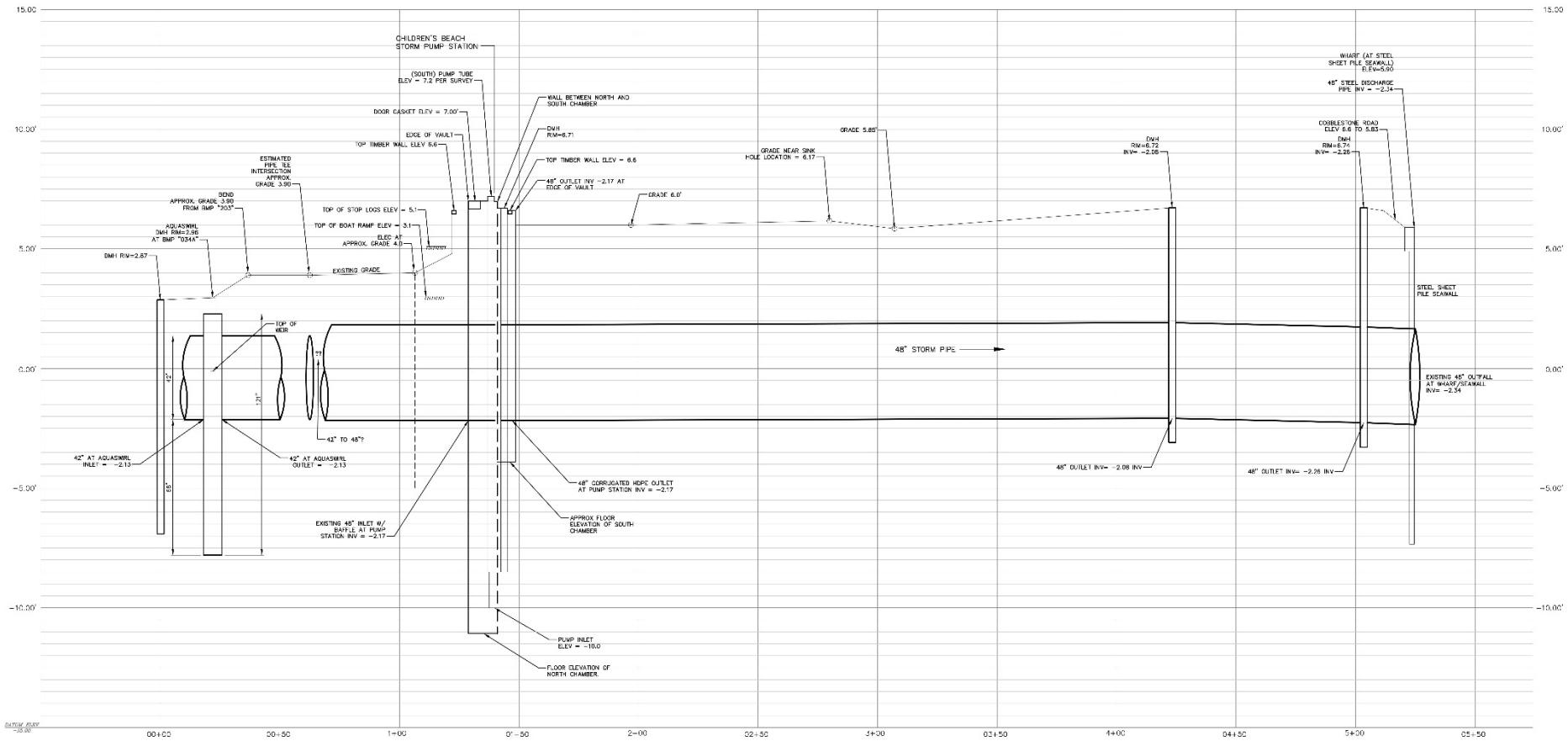

1 BMP "SWIRL CONCENTRATOR" TO STORM PUMP STATION TO DISCHARGE AT HARBOR

HORIZONTAL SCALE: 1" = 20'
VERTICAL SCALE: ½" = 1'-0"

FUSS & O'NEILL

Existing Conditions – BMP Concentrator

- Aqua-Swirl Model AS-8 Units (removes solids)
  - Two Installed Upstream of Children's Beach Pumping Station

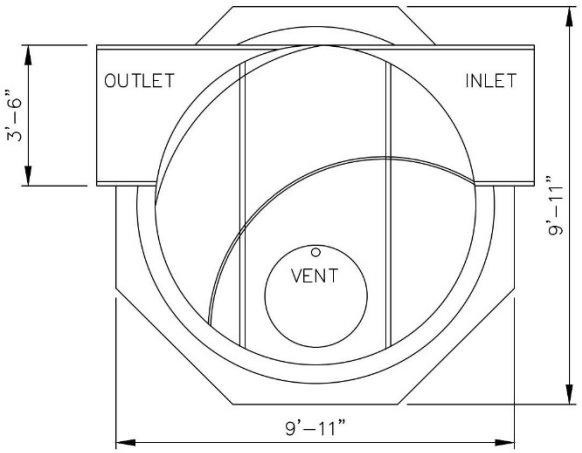

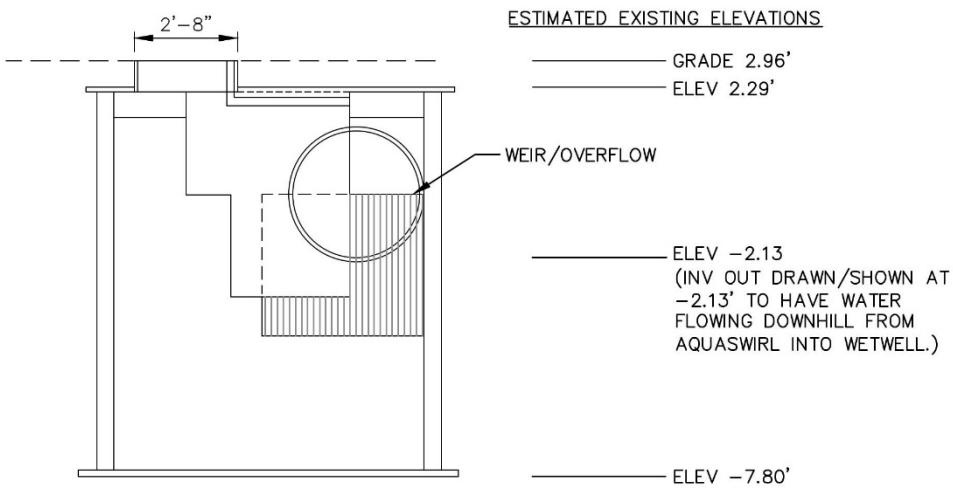

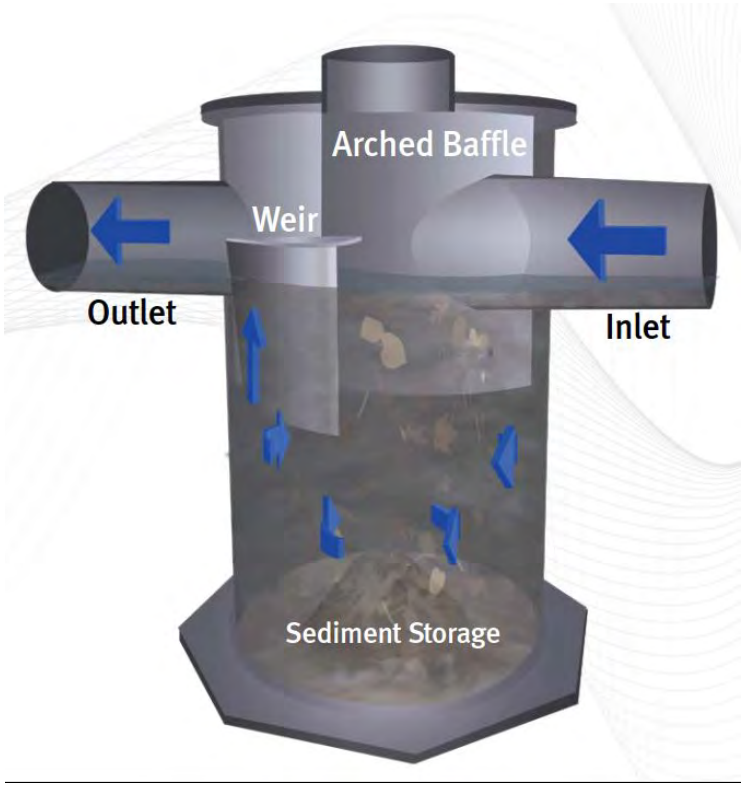

FUSS & O'NEILL

Existing Conditions - Pump Chamber

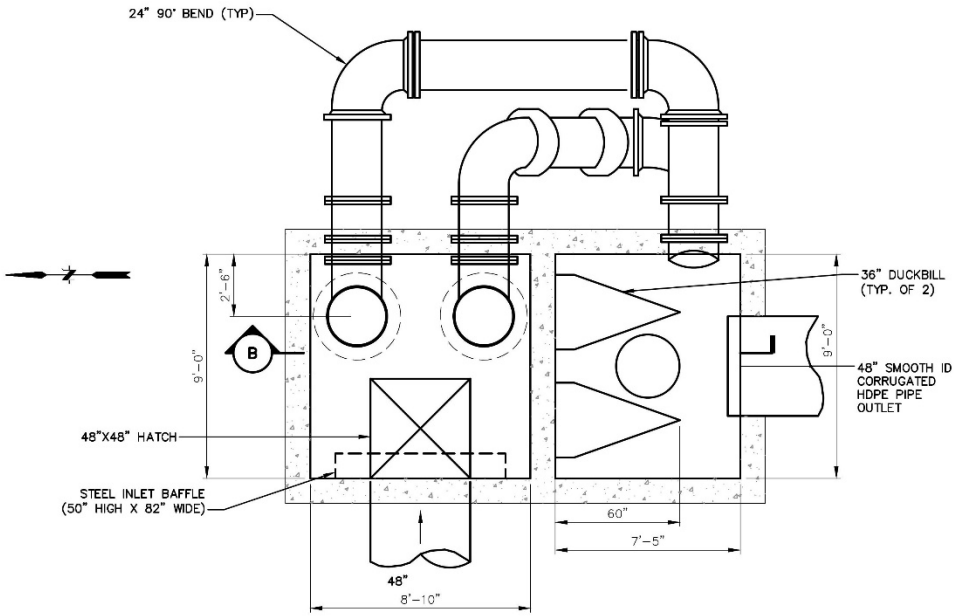

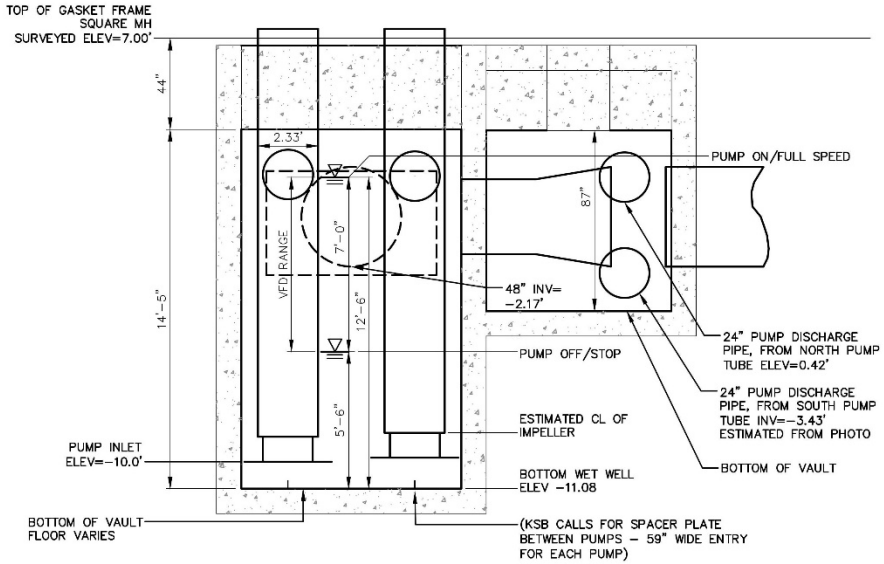

FUSS & O'NEILL

Existing Conditions - Important Elevations

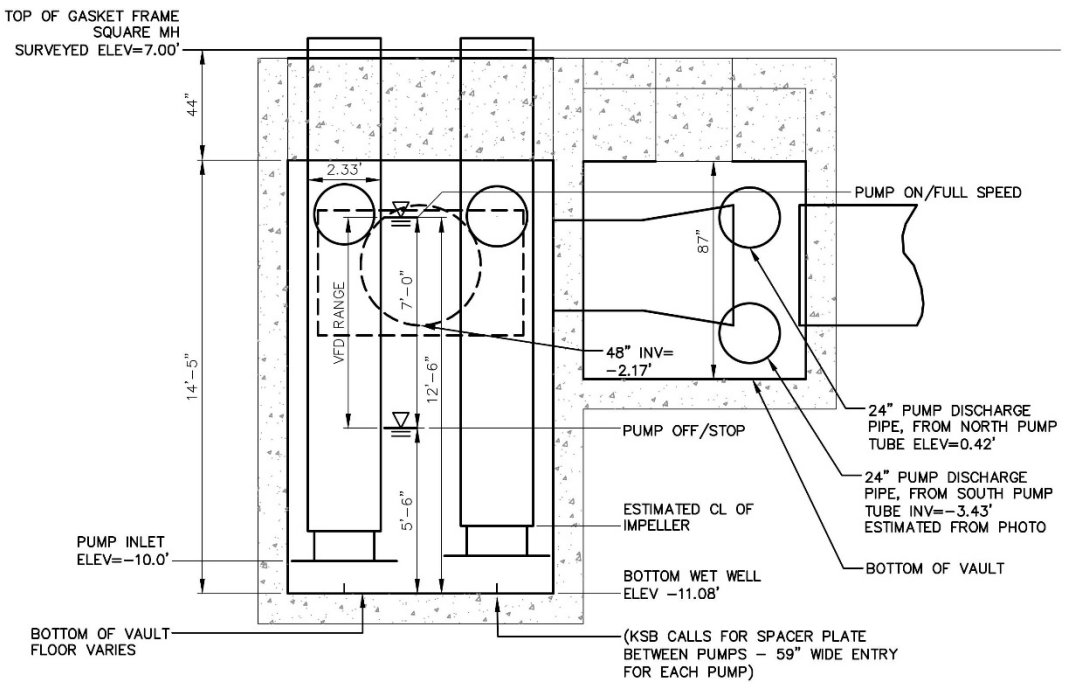

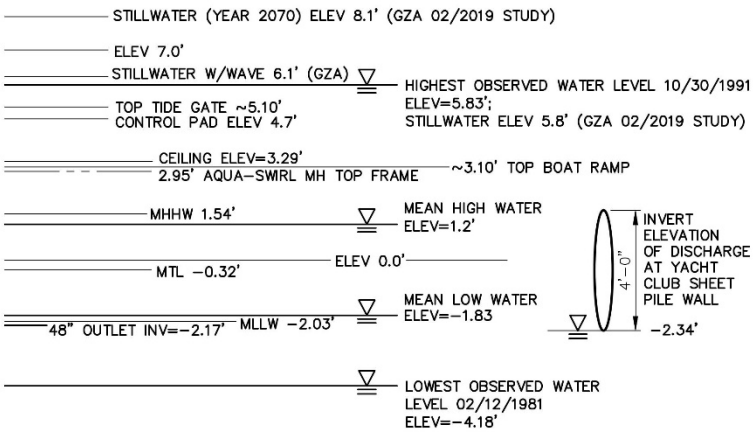

FUSS & O'NEILL

Existing Conditions - Discharge Chamber

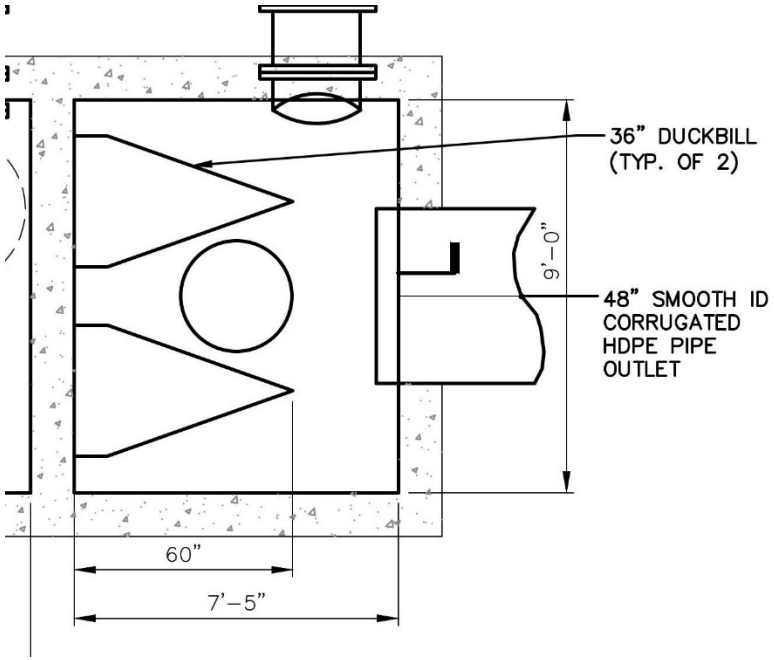

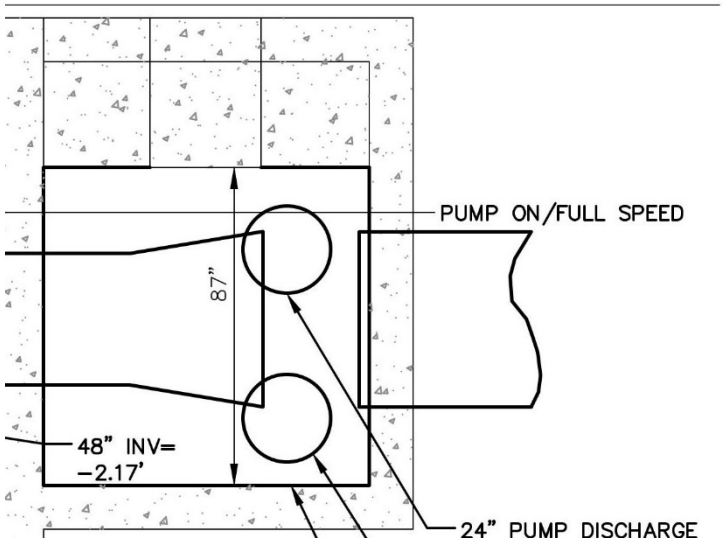

- Congested
  - No Room for 24" Flap Valves
  - No room for 24" Duck Bill
  - Hydraulic interference

FUSS & O'NEILL

Existing Conditions - Outfall

- Note: No Outfall Check Valve

Existing Conditions – Electrical & Controls

- Electrical Panel & Controls Remote to Pump Station (~200 ft to west)
  - 480 volt, 3 phase, 200 Amp
  - YASKAWA VFDs added in 2011
  - Sigma Controls –Floats & Level Sensor
  - Low Pad Elevation – 4.70 NAVD88

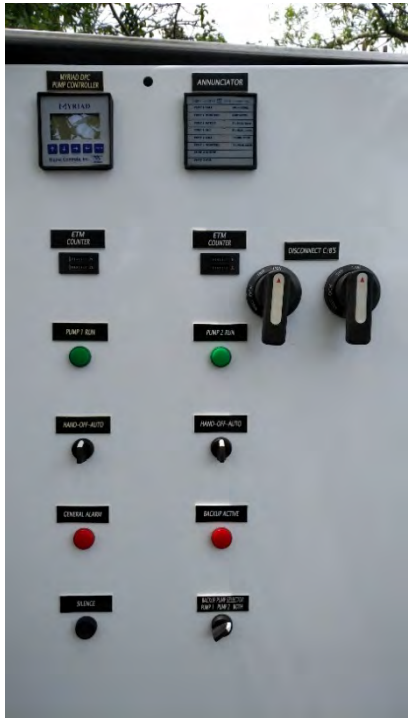

FUSS & O'NEILL

Children's Beach Stormwater Pumping Station

Scenario 1: Water Flows by Gravity at Mean Low Water

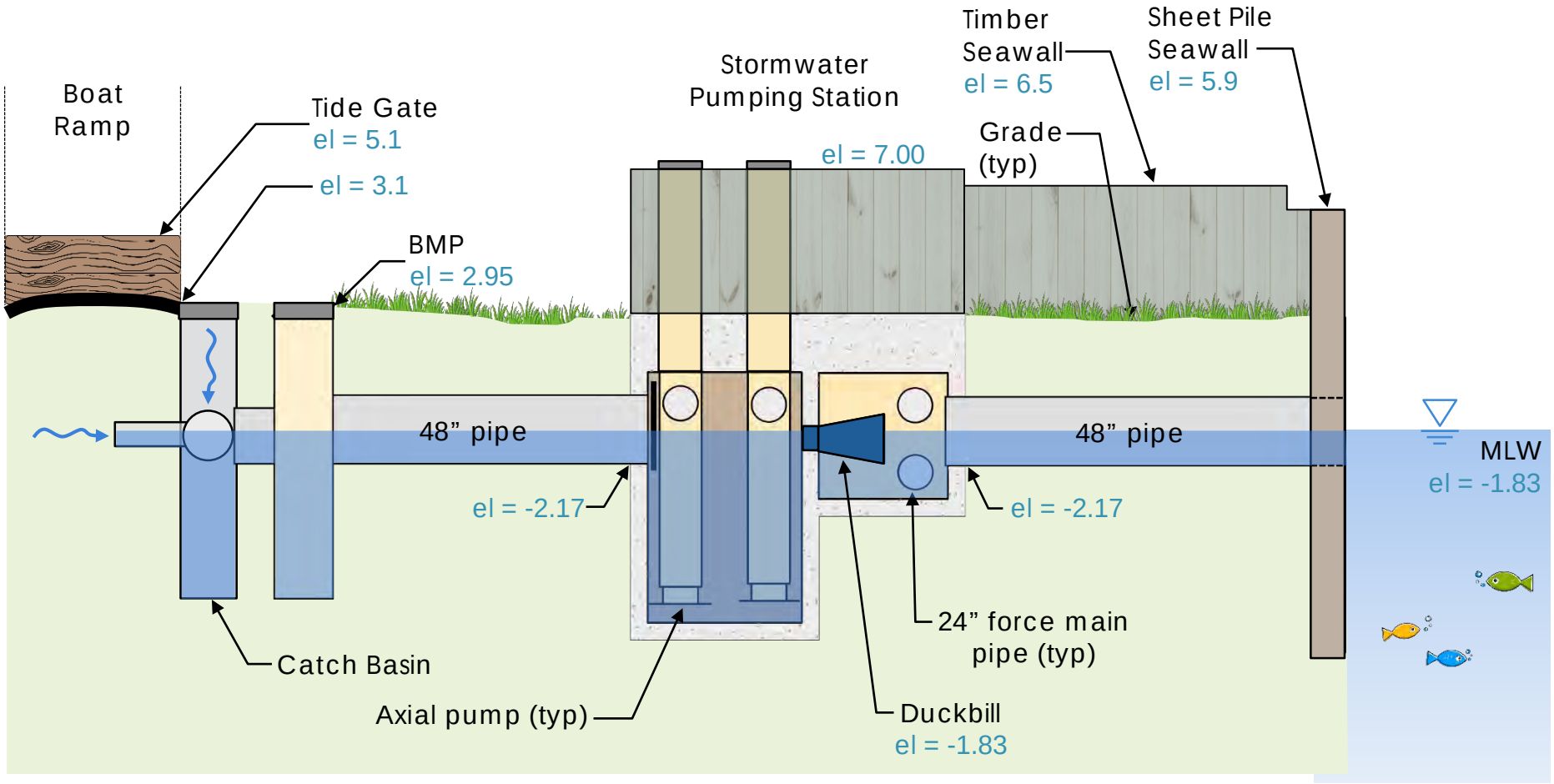

FUSS & O'NEILL

Children's Beach Stormwater Pumping Station

Scenario 2: Water Flows by Gravity at Mean High water

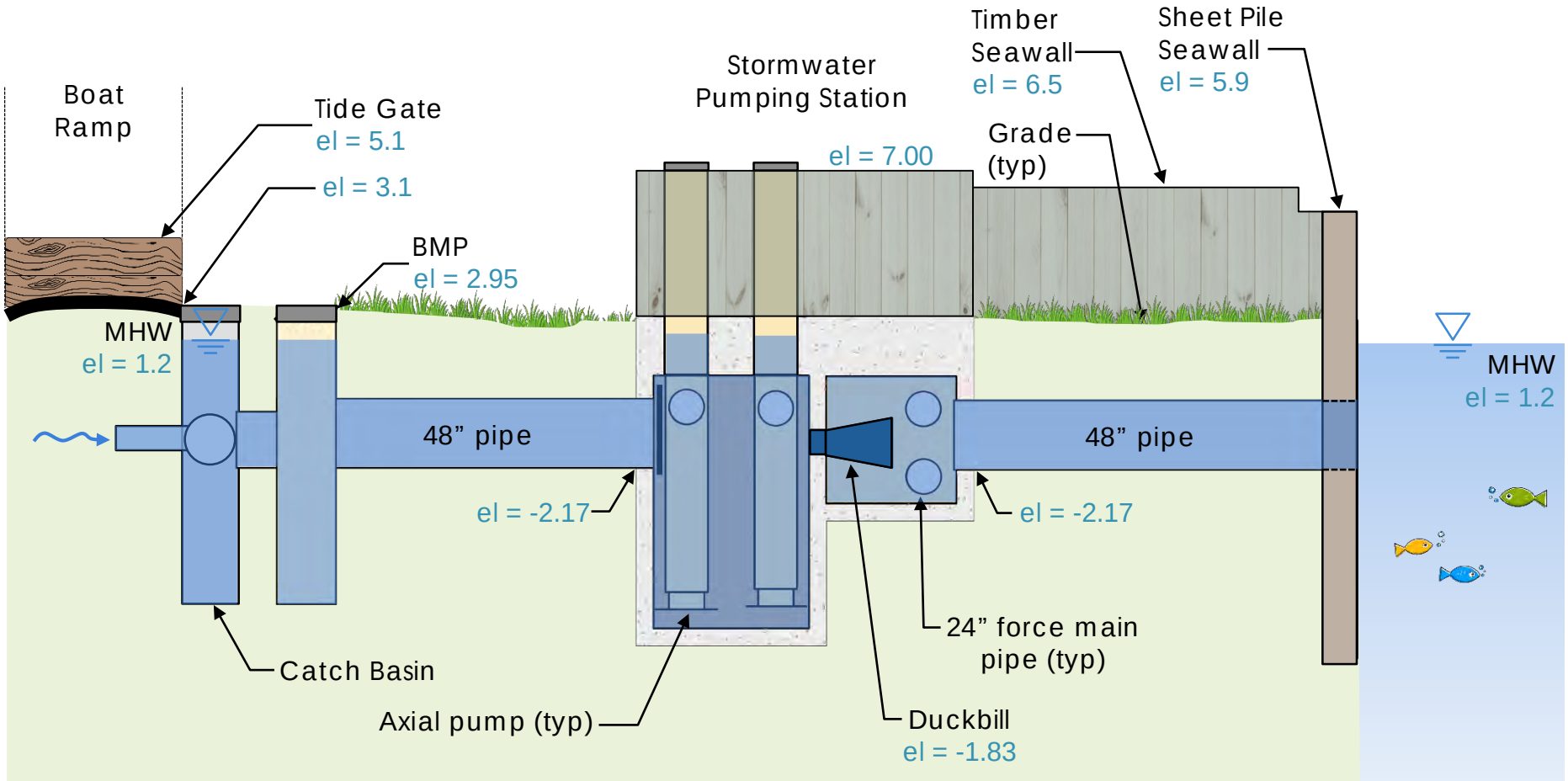

FUSS & O'NEILL

Children's Beach Stormwater Pumping Station

Scenario 3: Storm Tide – Pumps on with High Interior Drainage

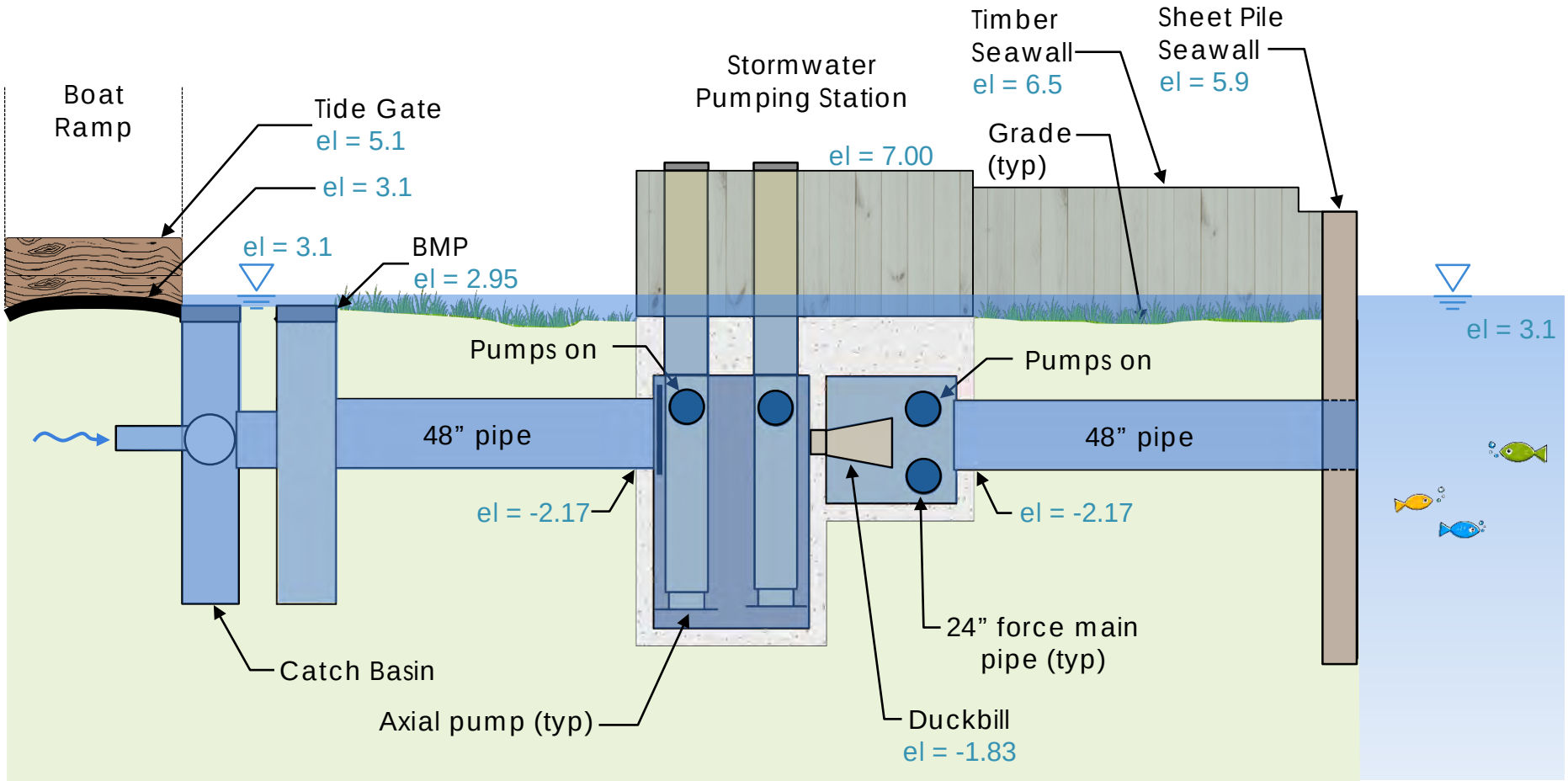

FUSS & O'NEILL

Children's Beach Stormwater Pumping Station

Scenario 3a: Storm Tide - Pumps on with High Interior Drainage, No Tide Gate

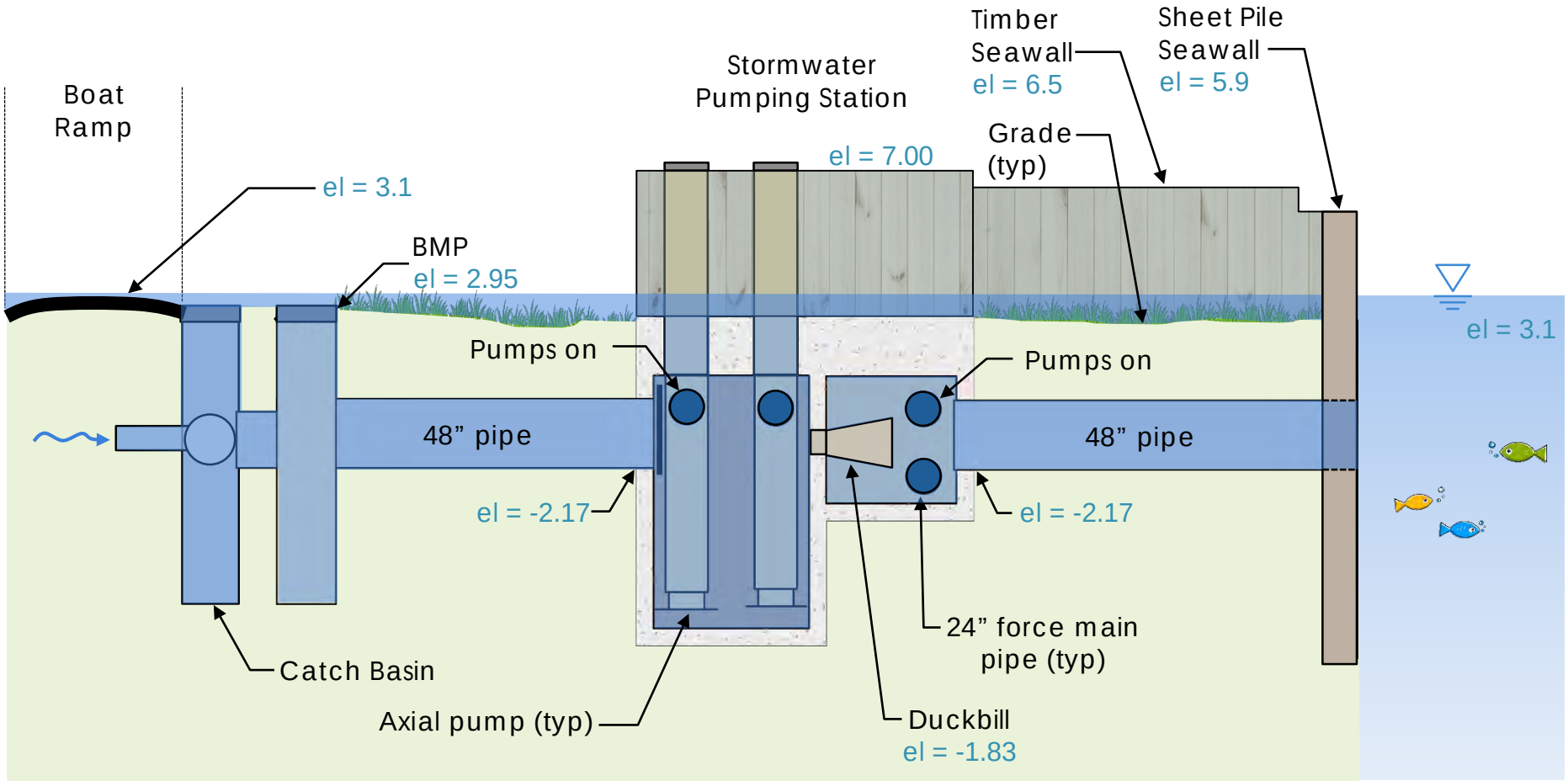

FUSS & O'NEILL

Children's Beach Stormwater Pumping Station

Scenario 4: Storm Tide - Pumps on with High Interior Drainage and Tide Gate

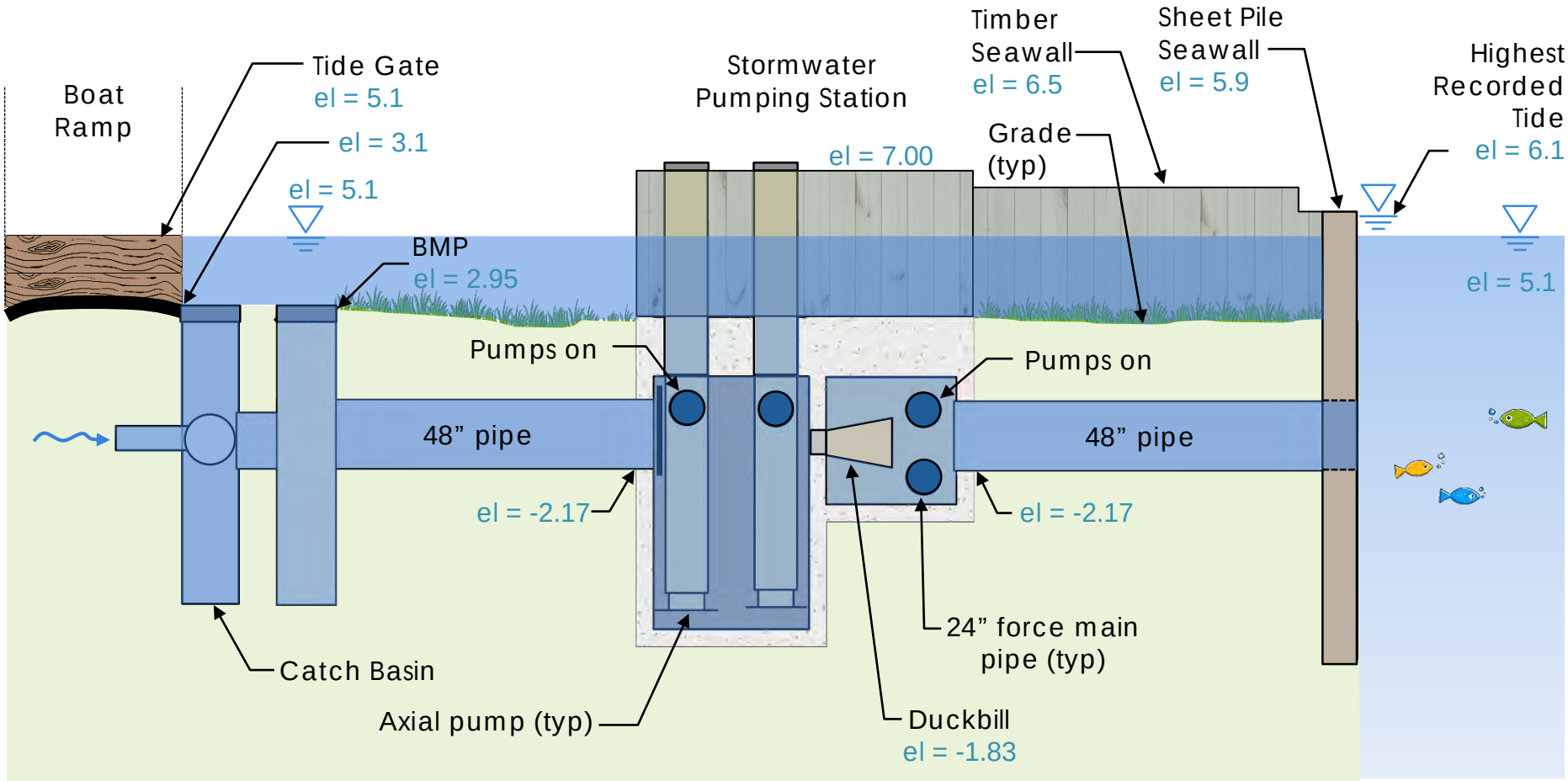

FUSS & O'NEILL

Children's Beach Stormwater Pumping Station

Scenario 5: Projected 2070 Stillwater with 2.3' Sea Level Rise

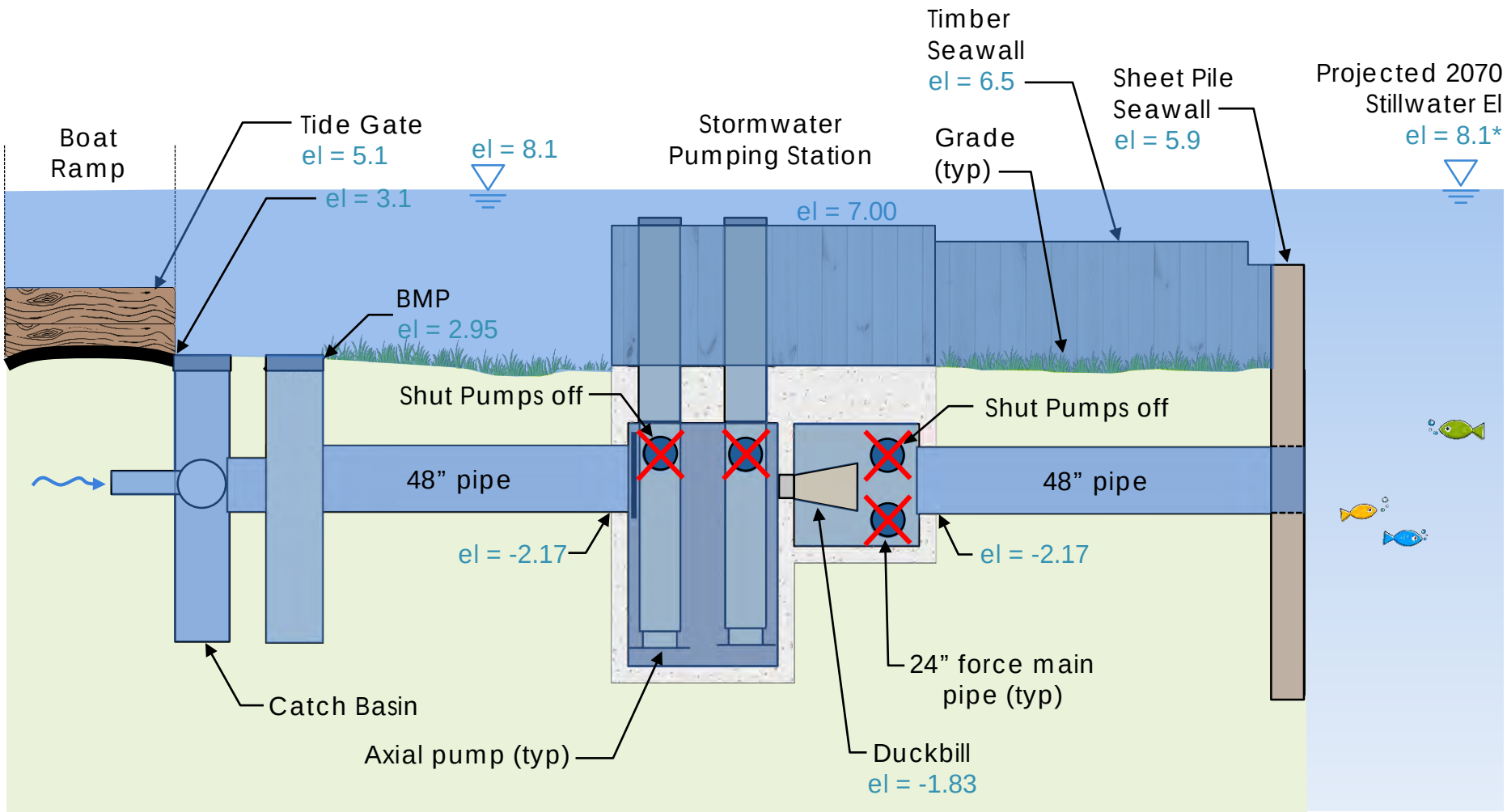

*Based upon GZA Feb. 2019 Projections with 2.3' SLR for extreme event Stillwater in 2070 at Town Pier.

FUSS & O'NEILL

Forensic Results - Flow Dynamics & Controls

- Flow Dynamics in Pump Station
  - Wet Well Volume 3,700 gallons –
    - *One pump - 18 seconds of storage*
  - Storage - Wet Well & 48" Pipe from AquaSwirl 13,100 gallons.
    - *One pump - 1.05 minutes of storage*
  - Control System has to respond rapidly
    - *"Short Cycling" of Pumps Reported – Frequent Starts Damage Motor*
  - Water Feed Issues
  - Venting is Important –
    - *Wet Well Vents undersized - Causes Pressure +/- Several Feet of Water*
    - *No vent on discharge chamber*
    - *Can cause overload of pump motor*

Forensic Results – Pump Hydraulic Issues

Project Nantucket
Customer pos.no
Project ID Childrens Beach PS
Pos.no
Created by D. Weaver

KSB

Page 3 / 5
2015-11-17

Performance curve

Pump type Amacan PA4 700-470/308XTG1

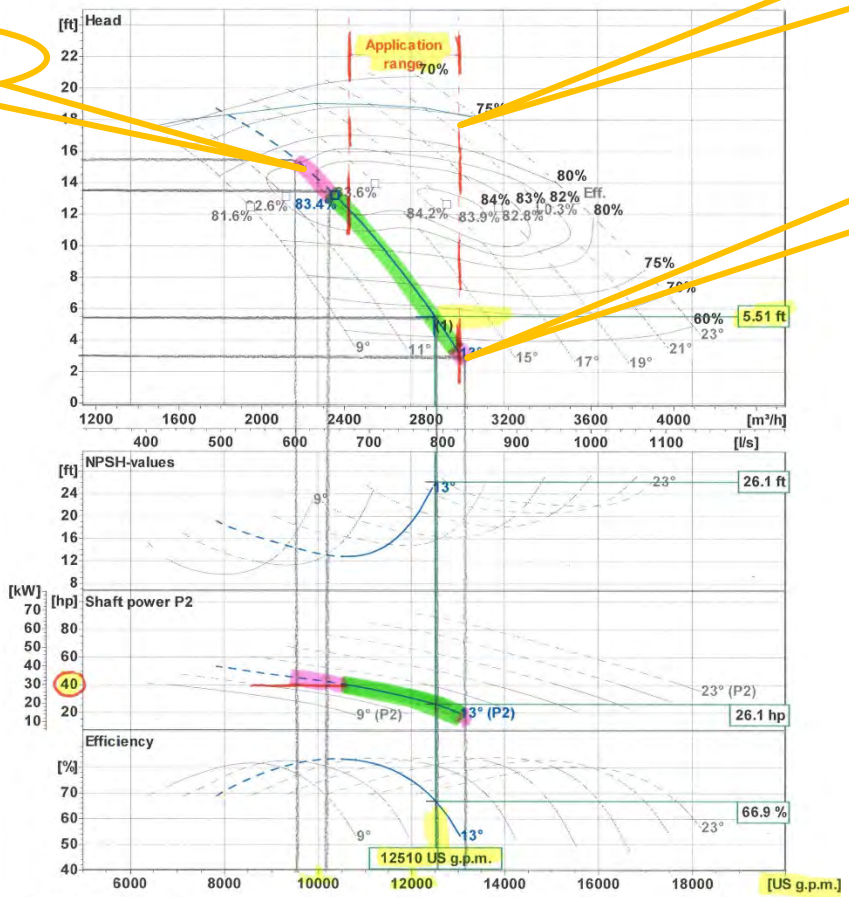

Impeller type	Axial propeller , Open			Curve number	K4200340/2
Free passage	3 inch	Density	62.322 lb/ft³	Frequency	60 Hz
Impeller size	18½"	Viscosity	1.082E-5 ft²/s	Speed	880 1/min

KSB Aktiengesellschaft, Turmstrasse 92, 06110 Halle (Germany), Phone +49 (345) 48260, Fax +49 (345) 4826 4699, www.ksb.com

Motor Overload

Small Application Range

Excess Pump Loading

FUSS & O'NEILL

Forensic Results - Pump Motor Problems

- Motors suffered damage due to overheating
  - Pumps called on to operate outside of the "Application Range"
    - *Left Side of Curve – Where Shaft Power Increases Above 40 HP*
  - 40 HP Motor size too small
    - *KSB recommends increasing motor size after determining hydraulic operating points*
      - Increase by 4 HP without VFD
      - Increase by additional 6 HP with VFD
      - For CBPS – Motor should be 50 HP

Forensic Results – Hydraulic Issues Cont'd

Open intake chambers with suction umbrella

If a check of the minimum water level in the pump sump establishes that this is insufficient, another chamber variant without corner fillets in combination with a suction umbrella fitted at the discharge tube's inlet may provide sufficient submergence to prevent air-entraining vortices. This allows the pump to operate at a lower suction-side minimum water level t_1 with the same pump size and the same operating point.

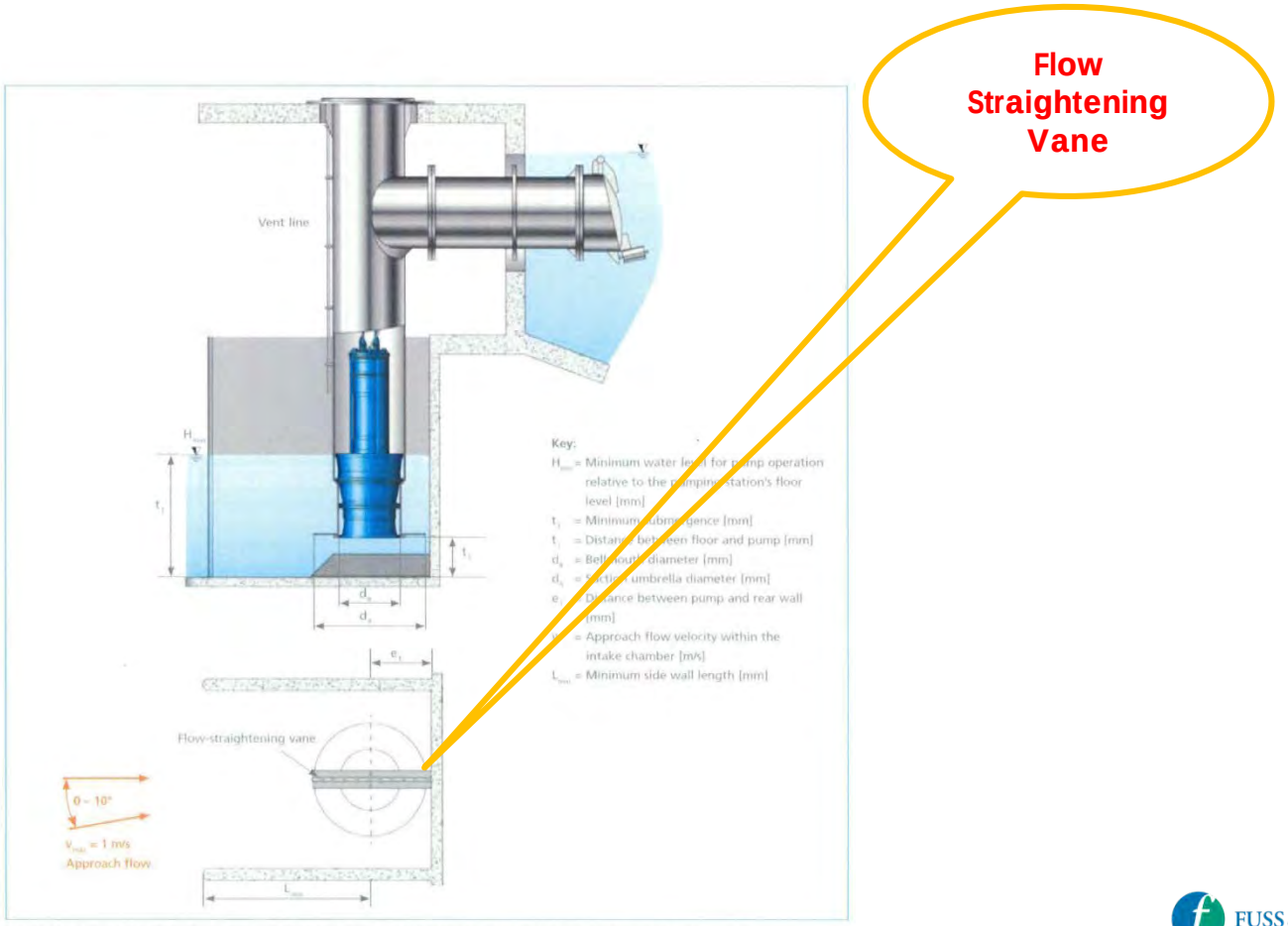

Fig. 23: Open intake chamber with suction umbrella (see the type series booklet or selection software for the actual dimensions)

FUSS & O'NEILL

Forensic Results – Hydraulic Issues Cont'd

Covered intake chambers

A special type of chamber is the covered intake chamber. It allows the lowest minimum water levels without the occurrence of air-entraining surface vortices and can accommodate flows approaching at an angle of 0 to 90 degrees at 1 m/s max.

However, this variant involves higher construction costs than the chamber types previously described. This type of chamber has more than proved its worth under unfavourable approach flow conditions and low water levels.

Formed Inlet

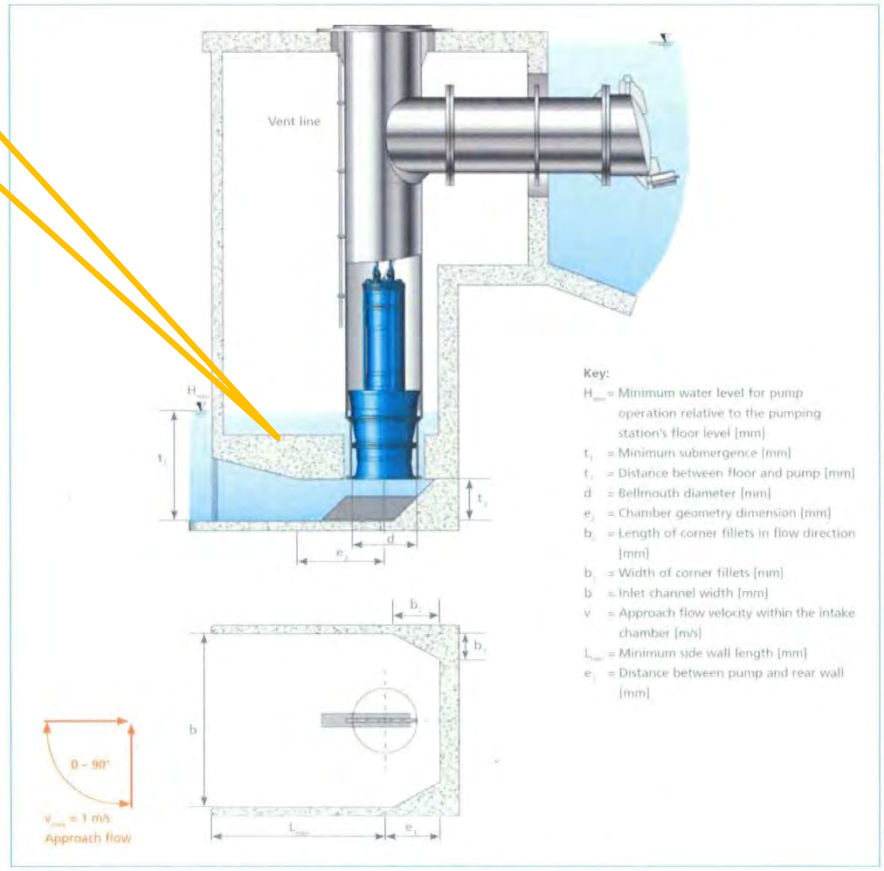

Fig. 24: Covered intake chamber (see the type series booklet or selection software for the actual dimensions)

FUSS & O'NEILL

Forensic Results – Hydraulic Issues Cont'd

9.6.1.3 Installation type CU

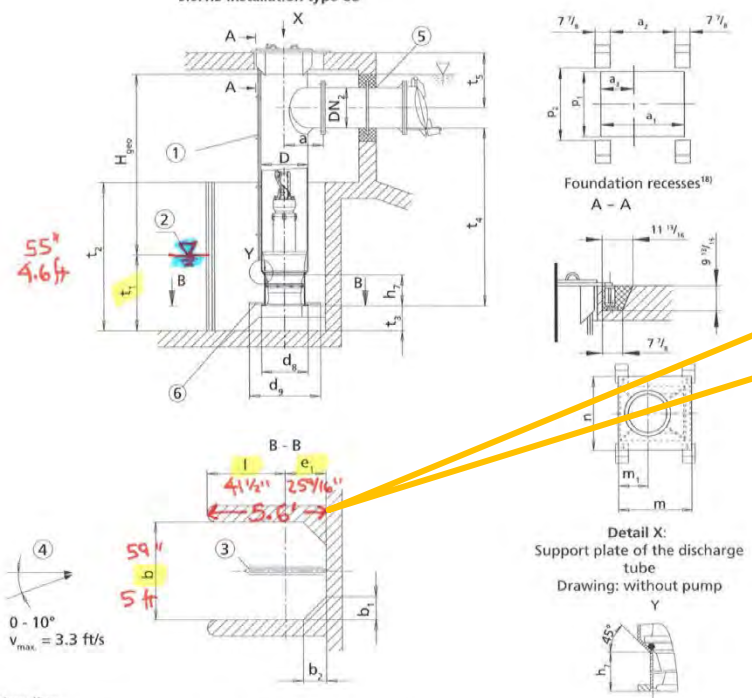

Minimum Dimensions for Children's Beach PS*

①: Vent line
②: Minimum water level (values see diagram on the next pages)
③: Flow-straightening vane (⇨ Section 9.6.1.7, Page 124)
④: Approach flow
⑤: Connect the discharge pipe to the discharge tube without transmitting any stresses or strains.
⑥: Suction umbrella - Option for reducing the minimum water level t_1

Table 56: Dimensions [inch]

Pump size	$DN_{2\,min.}$	$DN_{2\,max.}$	D	a	a_1	a_2	a_3	b	b_1		b_2	
									Without suction umbrella d_8	With suction umbrella d_9	Without suction umbrella d_8	With suction umbrella d_9
700 - 470	15 3/4	27 3/16	28	25 3/16	44 1/8	34 1/4	16 15/16	59 1/16	11 13/16	–	11 13/16	–
800 - 540	19 11/16	31 1/2	32	27 9/16	48 1/16	38 7/16	18 7/8	70 7/8	14 3/16	–	14 3/16	–
900 - 540	23 5/8	35 7/16	36	29 15/16	51 15/16	42 1/8	20 7/8	70 7/8	14 3/16	–	14 3/16	–
1000 - 700	27 9/16	39 3/8	40	31 7/8	56 5/16	45 11/16	22 13/16	90 9/16	18 1/8	–	18 1/8	–
1200 - 870	35 7/16	47 1/4	48 1/16	35 13/16	64 3/16	53 9/16	26 3/4	110 1/4	22 1/16	–	22 1/16	–
1500-1060	47 1/4	59 1/16	60	41 3/4	77 3/16	66 9/16	33 7/16	137 13/16	27 9/16	–	27 9/16	–
1600-1060	51 3/16	63	64	43 11/16	81 7/4	71 1/4	36 1/4	137 13/16	27 9/16	–	27 9/16	–

18) All dimensions for foundation recesses apply to discharge tube design without intermediate flange.

* Dimensions presented are part of the required design parameters but not the only requirements

FUSS & O'NEILL

Forensic Results – Hydraulic Issues Cont'd

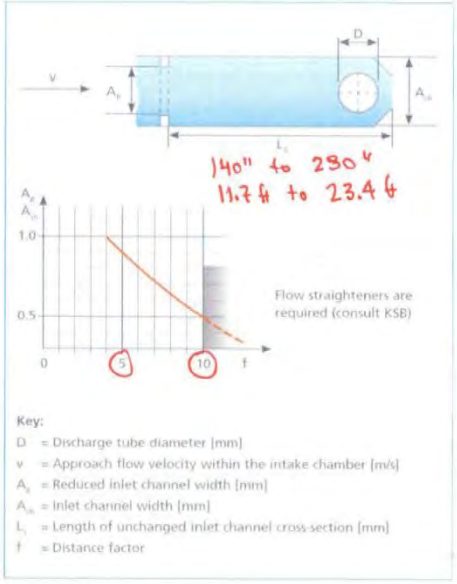

Fig. 27: Influence of cross-sectional constriction

If these mounting devices constrict the free flow cross-section, the distance between the pump and this point of flow disturbance must be checked and increased where necessary (Fig. 27).

28"

$$L_s = D \cdot f \quad [mm] \qquad \text{Formula (6)}$$

5 to 10

Key:

L_s = Length of unchanged inlet channel cross-section downstream of flow disturbance [mm]
D = Discharge tube diameter [mm]
f = Distance factor (see Fig. 27)

The intake chamber surfaces as well as the wall around the pump sump should have rough concrete surfaces. If the areas in contact with the fluid handled are too smooth or even provided with a paint coat, this may lead to the reduction of the wall shearing stress – and thus increase the risk of vortex formation (submerged vortices, and possibly surface vortices).
The roughness of surfaces in contact with the fluid should range from 1 to 3 mm.

Minimum Wet Well Length Approx.18 FT for Children's Beach PS*

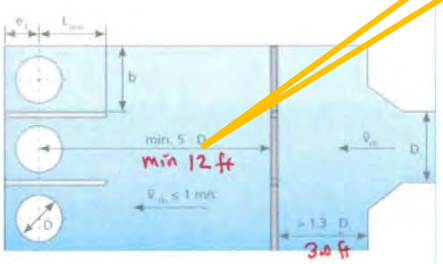

Key:

e_1 = Distance between pump and rear wall [mm]
L_{min} = Minimum length of lateral walls [mm]
b = Intake chamber width [mm]
$\bar{v}_{ch}$ = Mean flow velocity in inlet channel [m/s]
D_s = Inlet diameter [mm]
D = Discharge tube diameter [mm]

Fig. 39: Solution, Variant 4.2

Solution:

Each pump is to be provided with a complete intake chamber sized to match the respective pump (see the type series booklet or selection software). The intake chambers are installed facing the inlet in the opposite sump wall. A curtain wall with openings near the floor should be installed across the entire width of the pump sump upstream of the intake chambers. This prevents the pumps from influencing each other during pumping and ensures an even approach flow.

FUSS & O'NEILL

Forensic Summary - Revitalizing Children's Beach Pump Station

- Issues Have Been Identified
- DPW and F&O Working with Town Manager & Local Stakeholders
  - Put "Short-Term"/ Temporary Improvements in Place
    - *Ex. Short Term Pumping*
  - Goal is a "Permanent" Solution
    - *What Does "Long-Term" Really Mean? (see next slide)*
    - *Understand Sea-Level Rise Time Horizon*
    - *Define/List Permanent Improvements*

Forensic Summary - What Does “Long-Term” Really Mean?

- GZA February 2019 Report Results
  - Current:
    - *Stillwater Elevation (current condition) = 5.8*
    - *Total Water Level (stillwater with wave setup) = 6.3*
    - *For Reference:*
      - Top of Boat Ramp 3.1
      - Top of Tide Gate 5.1
      - Top of Pump Station 7.0
  - 2070:
    - *Stillwater Elevation (w/2.3 feet sea level rise yr. 2070) = 8.1*
    - *Total Water Level (stillwater w/ wave setup & 2.3ft 2070) = 8.6*

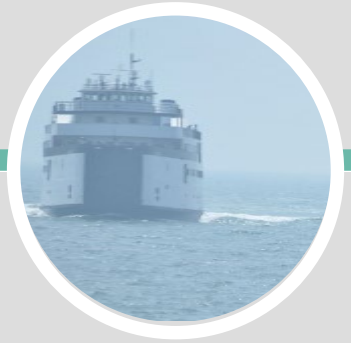

Questions & Discussion

Robert D. McNeil III, PE, MPA

Public Works Director

188 Madaket Road

Nantucket, MA 02554

(508) 228-7244

rmcneil@nantucket-ma.gov